WIBRE

100 YEARS 1919-2019

2019

UNDERWATER LIGHTING
EXTERIOR LIGHTING

100 YEARS
1919-2019

PIONEERS IN IP68-LIGHTING.
Made in Germany. Since 1919.

WWW.WIBRE.DE

CENTUM°°

LIGHT UNDERWATER. REDEFINED.

INFO ON PAGE 6

8

38

RECESSED SPOTLIGHTS
UNDERWATER

48

SURFACE SPOTLIGHTS
UNDERWATER | EXTERIOR

116

RECESSED SPOTLIGHTS
EXTERIOR

156

UNDERWATER-WINDOWS
UNDERWATER

224

UNDERWATER-LOUDSPEAKERS
UNDERWATER

228

OUTDOOR-FLOODLIGHTS
EXTERIOR

230

FLUORESCENT-LIGHTS
EXTERIOR

233

ACCESSORIES

POWER SUPPLIES
TRANSFORMERS
CONTROLLERS
CABLES
CABLE GLANDS
BRANCH BOXES
CONNECTION SYSTEMS
FLANGES
MOUNTING PLATES
MOUNTING ACCESSORIES
LAMPS

234

HEADOFFICE

Zentrale Deutschland
WIBRE Elektrogeräte
Edmund Breuninger GmbH & Co. KG
Liebigstraße 9 · 74211 Leingarten/Germany
Phone: +49 (0) 7131 9053-0
Fax: +49 (0) 7131 9053-19
info@wibre.de · www.wibre.de

GERMANY

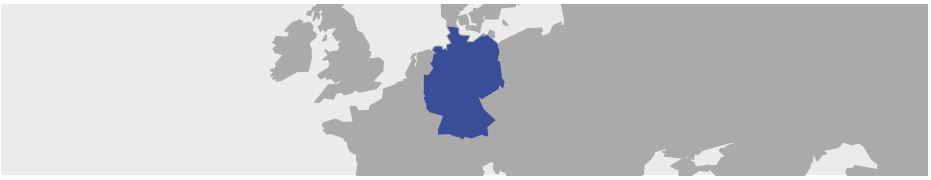

PLZ: 40–48, 50–53, 56–59
Dipl.-Ing. Michael Sauer
Schlesierstraße 2 · 47877 Willich
Phone: +49 (0) 2156 9116-84
Fax: +49 (0) 2156 9116-85
info@ivsauer.de
www.wibre.de

PLZ: 54–55, 75–79, 60–61, 63–69
Licht-Team Handelsvertretungen OHG
Birkenweg 7 · 67346 Speyer
Phone: +49 (0) 6232 6069-11
Fax: +49 (0) 6232 6069-15
info@das-licht-team.de
www.das-licht-team.de

EUROPE

Austria
LKD Licht Kommunal Digital GmbH
Münchner Bundesstraße 144 · 5020 Salzburg
A-5020 Salzburg
Phone: +43 (662) 432514-0
Fax: +43(662) 432514-111
office@lkd.at · www.lkd.at

Belgium
Dark at Night nv
Vliegplein 43 · 9991 Maldegem
Phone: +32 50 718140
Fax: +32 50 718138
info@dark.be · www.dark.be

Czech Republic and Slovakia
BERNDORF BÄDERBAU s.r.o.
Bystrice 1312 · 739 95 Bystrice nad Olší
Phone: +420 800 331 173
Fax: +420 558 326 387
info@berndorf-bazeny.cz · www.berndorf-bazeny.cz

Denmark
Anker & co
Dampfærgevej 13 · 2100 Copenhagen
Phone: +45 70213700
kontakt@ankerco.com · www.ankerco.com

Finland
Malux Finland Oy
Työpajatie 13a · FI-06150 Porvoo
Phone: +358 (0) 1957457-00
Fax: +358 (0) 1957457-50
info@malux.fi · www.malux.fi

France
MW-MarvalWay
1 rue centrale · 69960 CORBAS
Phone: +33 (0) 4 78 58 77 35
Fax: +33 (0) 4 78 58 98 71
mwinfo@mw-marvalway.fr · www.mw-marvalway.fr

Greece
FOSS SA
204, Kifisias AV. · 14562 Kifisia
Phone: +30 210 72-50580
Fax: +30 210 72-52162
info@foss.gr · www.foss.gr

Hungary
LISYS-Project KFT
Tengerszem utca 78
1142 Budapest
Phone: +36 06 1 307 6209
Fax: +36 06 1 307 6275
mail@lisys-project.hu · www.lisys-project.hu

Iceland
Iskraft
Smiðjuvegur 5
200 Kópavogur · Iceland
Phone: +354 5351200
Fax: +354 5351201
iskraft@iskraft.is · www.iskraft.is

Luxembourg
SIPEL Sàrl
42, ZAE Le Triangle Vert
L-5691 Ellange-Mondorf
Phone: +352 316660-1
Fax: +352 316660-64
wibre@sipel.lu · www.sipel.lu

Netherlands
ESZET Lighting B.V.
Postbox 64 · 3840 Ab Harderwijk
Van Leeuwenhoekstraat 21-23
3846 Ca Harderwijk
Phone: +31 (0) 341 4382-60
Fax: +31 (0) 341 4382-90
eszet@eszet.nl · www.eszet.nl

Norge
Luminator as
Hvamsvingen 11
2013 SKJETTEN
Phone: +47 679785-10
Fax: +47 679785-20
post@luminator.no · www.luminator.no

Portugal
Osvaldo Matos SA
Rua Santa Bárbara, 27/45
4400-289 Vila Nova de Gaia
Phone: +351 223 710 419
Fax: +351 223 702 044
mail@osvaldomatos.pt · www.osvaldomatos.pt

Spain
Difusiona SL
Provençals 94
08019 Barcelona
Phone: +34 93 362 22 79
Fax: +34 93 241 79 47
info@difusiona.eu · www.difusiona.eu

Sweden
Malux Sweden AB
Box 221 · 891 25 Örnsköldsvik
Phone: +46 (0) 660 292900
Fax: +46 (0) 660 85085
info@malux.se · www.malux.com

Switzerland (french)
Schréder Swiss S.A.
ZI de l'Ecorcheboeuf
CH 1084 Carrouge
Phone: +41(21)9030235
Fax: +41(21)9033525
info@schreder.ch · www.schreder.ch

United Kingdom and Ireland
Light Projects Ltd
23 Jacob Street
London, SE1 2BG
Phone: +44 (0)20 7231 8282
info@lightprojects.co.uk
www.lightprojects.co.uk

ASIA

Asean –
Thailand, Myanmar, Cambodia, Vietnam
MOSAIC EINS Co Ltd.
97 Suanmali Soi 3, Bamrung Muang Road
Themsirin, Pomprab, Bangkok 10100
Phone: +66 26218200
service@mosaiceins.com

East Asia – Hong Kong, China, Macau, Taiwan, Malaysia
Anton W.C. Denker GmbH
Lindenstrasse 39 · 20099 Hamburg/Germany
Phone: +49 (0) 40 248456-0
info@anton-denker.de

Indonesia
PT Sinar Teknik Tirta Pratama (Medan)
Jl. Cirebon Nr. 77
20212 Medan
Phone: +62 614569605
info@sinarteknik.com
www.sinarteknik.com

PT Esparindo Dayamegah (Jakarta)
Kompleks Mega Glodok Kemayoran Kanto Blok B-1
Jl. Angkasa Kav. B-6 · Kota Baru Bandar Kemayoran
Jakarta Pusat 10610
Phone: +62 21 65867688
info@esparindo.com . www.esparindo.com

India
Versalite Hitech Lighting Pvt.Ltd.
Marathon Icon, #805, Off Ganpatrao Kadam Marg
Lower Parel (W), Mumbai 400 013
Phone: +91 22 4333 1818/2389 3454
sales@versa-lite.com
www.versa-lite.com

Israel
H.S Oran Lighting LTD
St., Kvuzat L.G. 3, IL Kfar Saba · Israel
Phone: +00972 974666412
oranlighting@bezeqint.net

Korea
SJL Corp.
1102-1103 Sungjee Starwith
954-6 Gwanyang-Dong, Dongan-Gu
Anyang-Si, Gyeonggi-Do 463-060
Phone: +82-31-345-0345
sjl@sjllighting.com · www.sjllighting.com

Middle East – Lebanon, Saudi Arabia, Yemen, Oman, Qatar, United Arab Emirates, Bahrain, Kuwait, Jordan
DPS Industrial GmbH & Co. KG
Sachsenstraße 5
20097 Hamburg/Germany
Phone: +49 (0) 40 682897-0
light@dps-industrial.de

Russia
ECTES
Lubyanskij drive 27/1
build.1, office 44
101000, Moscow, Russia
Phone: +7 499 1205453
info@ectes.ru
www.ectes.ru

Singapore
LuxLight
No. 5 Kaki Bukit Place
Singapore 416183
Phone: +65-6278 8588
sales@luxlight.sg
www.luxlight.sg

Turkey
Hi-Tec Lighting
Sedef Cad. No:2, A Blok. Kat:19 D:80
Atasehir/Istanbul, Turkey
Phone: +90 216 4563794
info@hi-tec.com.tr
www.hi-tec.com.tr

AFRICA

Angola
Osvaldo Matos SA, Luanda
Phone: +244 918 061 453
mail@osvaldomatos.co.ao
www.osvaldomatos.co.ao

Egypt
Siraj Lighting Co.
38 Beirut St. Heliopolis · Cairo - Egypt
Phone: +202 22564030
bidding@siraj-lighting.com
www.siraj-lighting.com

Morocco
ARRAKIS SARL
Villa Nr. 4, Rue Oum Keltoum
20000 Casablanca, Maroc
Phone: +212 (0) 522949947
contact@arrakis.ma

Tunisia
Design Technologies
Z.I Sidi Daoud
2045, La Marsa, Tunisie
Phone: +216 71854444
dtek@designtechnologie.com
www.designtechnologie.com

AMERICA

Brasil
Osvaldo Matos Brasil Ltda.
Av. 9 de Julho, 4939, cj 126 A
CEP 01407-200 Jardim Paulista
São Paulo SP Brazil
Phone: +55 11 3045 3095
projetos@osvaldomatos.com.br
www.osvaldomatos.com.br

USA
Designplan Lighting Inc.
79 Trenton avenue
Frenchtown, NJ 08825 · USA
Phone: +001 908 9967710
sales@designplan.com
www.designplan.com

AUSTRALIA

Australia and New Zealand
Form and Light Pty Ltd
Suite 4.11, 29-31 Lexington Drive
Bella Vista NSW, 2153
Phone: +61 2 8824 7940
info@formandlight.com.au
www.formandlight.com.au

Australia
TLS Productions
Unit 2, 1 President St
Welshpool, Perth, Western Australia, 6106
Phone: +61 8 9 488 3366
Mobile: +61 412 284 127
info@tlswa.com.au
www.tlswa.com.au

4.0292 10

4.0292.73 14

4.0291 18

4.0291.73 22

4.0202 26

4.0102 30

4.0052 34

4.0050 40

4.0100 44

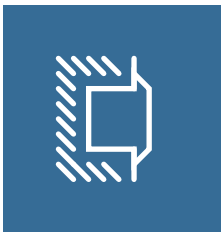

4.0199 50

4.0299 54

4.0299.73 58

4.0299.75 62

4.0291.57 66

4.0291.58 68

4.0271 70

4.0273 72

4.0275 74

4.0301 76

4.1900 78

4.2000 82

4.2012 86

4.1911 90

4.0012 92

4.0171 96

4.0087 100

4.0088 102

4.0080 104

4.0083 106

4.0093 108

4.3061 110

4.0011.15 118

4.0072 122

4.0086 126

4.0240 128

4.0192 132

4.0195 136

4.0365 140

4.0095 144

4.2202 148

4.4110 152

4.0011 158

4.0021 162

4.0026 166

4.0071 170

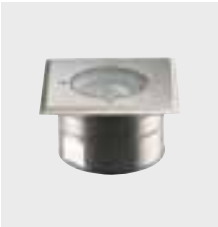
4.0061 174

4.0091 176

4.0197 178

4.0198 182

4.0098 186

4.0304 190

4.4000 196

4.4100 196

4.1010 198

4.3030 202

4.3060 206

4.3090 210

4.3012 214

4.2500 224

4.1914 226

4.0014 228

4.0100

2300 LUMEN

18 WATT

Ø 100 MM

FOR FOUNTAINS AND EXTERIOR AREAS

PAGE 44

4.0050

675 LUMEN

5 WATT

Ø 50 MM

FOR FOUNTAINS AND WATER FEATURES

PAGE 40

4.0292

6900 LUMEN

42 WATT

Ø 230 MM

FOR LARGE AND MEDIUM SWIMMING POOLS

PAGE 10

4.0202

4600 LUMEN

31 WATT

Ø 210 MM

FOR MEDIUM AND SMALL SWIMMING POOLS

PAGE 26

NEW SPOTLIGHT SERIES

CENTUM°°

LIGHT UNDERWATER. REDEFINED.

CENTUM°°, from the Latin and based on the word "century", refers to our many years of experience in the development and production of underwater lights, but at the same time marks the beginning of a new era.

The CENTUM°° series includes built-in and surface mounted spotlights for the underwater area. The light sources used are particularly powerful and compact LED modules. The CENTUM°° family has been successively upgraded upwards and downwards. A wide range of sizes, power levels and beam characteristics handle various installation situations and lighting tasks. Ultimately, complete lighting solutions with a uniform lighting design can be realized with CENTUM°°.

Thanks to effective thermal management and low-loss light radiation, CENTUM°° achieves one of the highest light outputs in the underwater area, with 166 lumens per watt. The permanent temperature monitoring and an integrated surge protection ensure the optimum operation of the LED technology. Of course, CENTUM°° offers the tested and proven Wibre quality: The watertight housing with protection class IP68 consists of V4A-stainless steel 1.4571, 316L. The light output is sealed by a highly transparent, ultra-white glass.

CENTUM°° is operated with 12 V-DC and thus guarantees the safety of the users according to standards and regulations. The long lifetime of this series has been certified by an independent institute.

4.0102

2300 LUMEN

18 WATT

Ø 150 MM

FOR SMALL SWIMMING POOLS AND WATER FEATURES

PAGE 30

4.0052

675 LUMEN

5 WATT

Ø 76 MM

FOR SMALL SWIMMING POOLS AND EFFECT LIGHTING

PAGE 34

CENTUM°°
RECESSED SPOTLIGHTS
UNDERWATER

PAGES 8-37

RECESSED SPOTLIGHT 4.0292

UNDERWATER | IP68

- New development
- Up to 6900 lumen light intensity
- Ideal for hotel pools and public pools

4.0292 | SWIMMINGPOOL-LIGHT

FOR ILLUMINATING MEDIUM AND LARGE SWIMMING POOLS.

IP68 | STAINLESS STEEL V4A 1.4571 316Ti | POW-LED INCL. | 3.000 K 4.500 K 6.000 K BLUE | RGB-W | CONSTANT CURRENT KONSTANT STROM | DALI 1-10 V OPTIONAL DIMM | CABLE INCL. | max 5m

NEW SERIES

CENTUM°°

LIGHT UNDERWATER.
REDEFINED.

INFO ON PAGE 6

NEW

- Protection class IP68 – up to 5m water depth
- Entirely made of stainless steel 316Ti 1.4571, epolished
- Round attachment cover, made of stainless steel 316Ti, height 2 mm

...

- POW-LED cold white, warm white, neutral white
- POW-LED royal blue
- Multichip POW-LED RGB-W
- operating mode: constant current
- temperature controlled (onboard)
- surge protection
- light distribution especially for swimming pool lighting "asymmetric Mixflux"

...

- Constant-current power source/RGB-W-controller ordered separately
- Installation housing made of stainless steel 316Ti with 1.5 m cable protection tube
- Supplied with 5 m of special underwater cable

UNABHÄNGIG GEPRÜFT UND ZERTIFIZIERT. INDEPENDENTLY TESTED AND CERTIFIED. THERMAL, ELECTRICAL, LIGHTING GEPRÜFT CERTIFIED LED INSTITUT DR. UWE SUBKE

12 V-DC-NORMGERECHT BETRIEB ZULÄSSIG UNTER WASSER CONFORMING 12 V-DC STANDARD OPERATING UNDERWATER ZUGELASSEN UNTER WASSER 12 V-DC APPROVED UNDER WATER

ADDITIONAL PARTS

TIPP IP65 + –

mounting housing
plastic, IP65, with 2 in/1 out, transparent cover,
suitable for power supply 5.0630.01.12 and RGB-W Controller 5.0630.09.52
9.0630.65.12

DMX DONGLE

DMX-Dongle
load resistance 120 Ohm
5.0670.09.65

PRODUCT LINE

4.0292.73 – Standard Saline
Recessed spotlights
(underwater)
> Page 14

4.0291 – Retrofit
Recessed spotlights
(underwater)
> Page 18

4.0291.73 – Retrofit Saline
Recessed spotlights
(underwater)
> Page 22

< Project
Disneyland® Paris, Hotel New York, France
©Disney
Partner: MW MArval

RECESSED SPOTLIGHT 4.0292

UNDERWATER IP68

Installation housing

pressure flange
for thin-walled pools or pools with fitted plastic foil

gluing and pressure flange
for adhesive/foil coating with pressure flange

gluing flange
for adhesive/foil coating

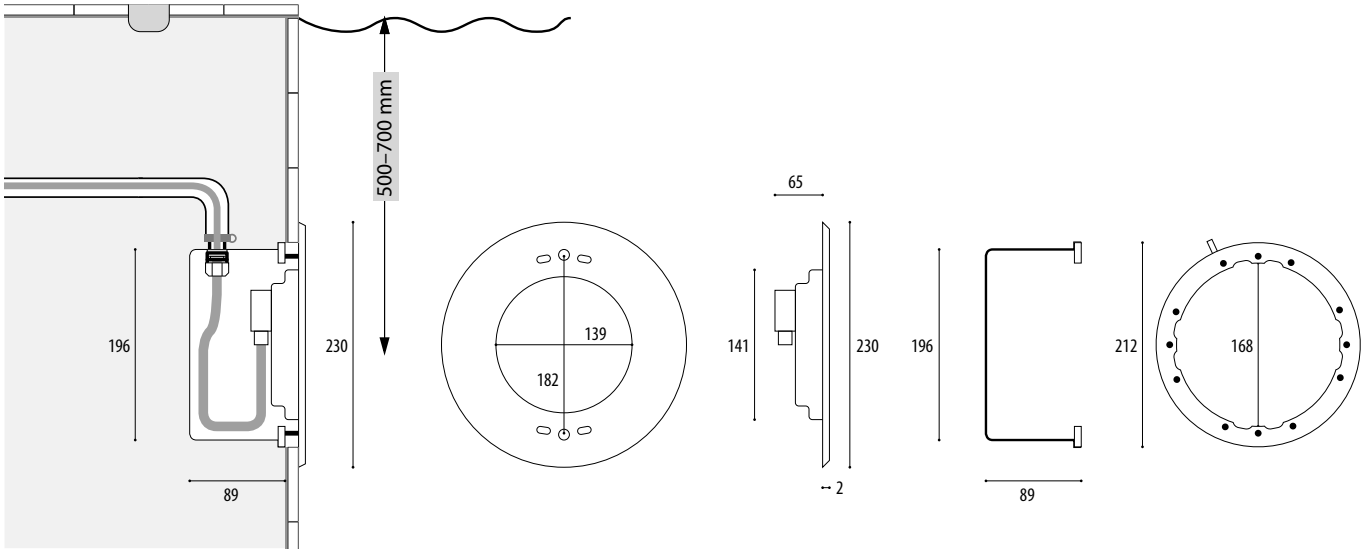

Article number	Lamps	Lumen	Light colour	Wattage	Current	Radation angle	UW-Cable, installs
ONLY UNDERWATER OPERATION							
STANDARD VERSION - NEW INSTALLATION IN COMBINATION WITH INSTALLATION HOUSING							
4.0292.00.11	12 POW-LED	6900 lm	6000K cold white	total 47 W	CC 3600mA @12 V-DC	asymmetrisch Mixflux	UW, 2x2,5 qmm
4.0292.00.12	12 POW-LED	5640 lm	3000K warm white	total 47 W	CC 3600mA @12 V-DC	asymmetrisch Mixflux	UW, 2x2,5 qmm
4.0292.00.13	12 POW-LED	6036 lm	4500K neutral white	total 47 W	CC 3600mA @12 V-DC	asymmetrisch Mixflux	UW, 2x2,5 qmm
4.0292.00.16	48 POW-LED		500mW/LED royal blue 450 nm	total 49,5 W	CC 3600mA @12 V-DC	asymmetrisch Mixflux	UW, 2x2,5 qmm
4.0292.00.41	12 Multichip POW-LED	cold white: 2100 lm	RGB-CW cold white 6000K	all on 75 W	CC 1400mA @12 V-DC	asymmetrisch Mixflux	UW, 1x4,0 + 4x1,0 + 2x0,25 qmm
4.0292.00.42	12 Multichip POW-LED	warm white: 1800 lm	RGB-WW warm white 3000K	all on 75 W	CC 1400mA @12 V-DC	asymmetrisch Mixflux	UW, 1x4,0 + 4x1,0 + 2x0,25 qmm
4.0292.00.43	12 Multichip POW-LED	neutral white: 1920 lm	RGB-NW neutral white 4500K	all on 75 W	CC 1400mA @12 V-DC	asymmetrisch Mixflux	UW, 1x4,0 + 4x1,0 + 2x0,25 qmm

INSTALLATION HOUSING

4.0292.01.00	made of V4A stainless steel with 1.5 m protective cable tube and M20 plastic terminating connection, for welding into stainless steel pools and for installation in concrete pools with tile covering
4.0292.02.00	made of V4A stainless steel with 1.5m protective cable tube and M20 plastic terminating connection, for installation in thin-walled pools and foil lined pools (pressure flange ø 234 mm)
4.0292.03.00	made of V4A stainless steel with 1.5 m protective cable tube and M20 plastic terminating connection, for installation in pools with adhesive/foil coating (adhesive flange ø 350 mm)

RECESSED SPOTLIGHT 4.0292

IP68 | UNDERWATER

6000K, Mixflux

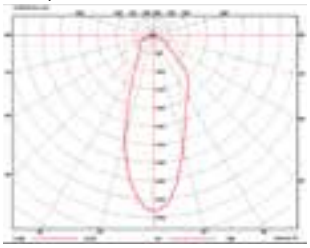

3000K, Mixflux

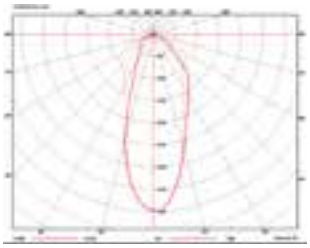

4500K, Mixflux

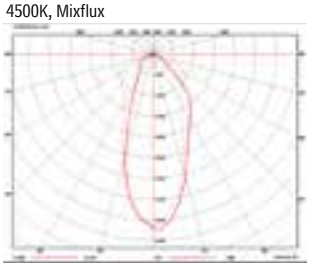

< Project
Carpesol, Bad Rothenfelde. Germany
Planner: Architekturbüro de witt janßen partner, Bad Zwischenhahn

NOTE

Spotlights can (according to prior agreement) also be supplied without the connected cable to simplify installation with large cable lengths (up to max. 40m). The cable can be connected to the connection box without opening the spotlight.

Matching installation housing should be selected, depending on the installation type and situation.

SOLE SALINE

Version for saline water see page 14

OPTIONS

Possible beam angle POW-LED

15° | 30° | 45° | 120° | 15x50°

POW-LED monochrome, single colour in green, red, amber, blue, capri blue, 2700K

CUSTOM MADE

Individual configuration of the LED multichips possible

Power supplies Technical details see from page 234.

5.0630.01.12	Constant Current power supply, dimmable, max 1 spotlights	5.0630.03.12	Constant Current power supply, dimmable, max 3 spotlights	5.0630.10.12	Constant Current power supply, IP65, not dimmable, max 1 spotlights
5.0630.01.12		5.0630.03.12		5.0630.10.12	
5.0630.01.12		5.0630.03.12		5.0630.10.12	
5.0630.01.12		5.0630.03.12		5.0630.10.12	
5.0630.09.52	RGB-W-Controller, max 1 spotlights				
5.0630.09.52					
5.0630.09.52					

RECESSED SPOTLIGHT
4.0292.73

UNDERWATER | IP68

- New development
- Up to 6900 lumen light intensity
- For baths with increased brine concentration

4.0292.73 | SWIMMINGPOOL-LIGHT

SALINE VERSION. FOR ILLUMINATING MEDIUM AND LARGE SWIMMING POOLS.

IP68 | STAINLESS STEEL V4A 1.4539 904L | POW-LED INCL. | 3.000 K 4.500 K 6.000 K BLUE | RGB-W | CONSTANT CURRENT KONSTANT STROM | DALI 1-10 V OPTIONAL DIMM | CABLE INCL. | max 5m | III

NEW SERIES
CENTUM°°
LIGHT UNDERWATER.
REDEFINED.
INFO ON PAGE 6

NEW

- Protection class IP68 – up to 5m water depth
- special corrosion-proof version made marine grade 904L stainless steel 1.4539
- for pools with increased saltwater concentration (up to 3.5 %)
- Round attachment cover, made of stainless steel 904L, height 2 mm

...

- POW-LED cold white, warm white, neutral white
- POW-LED royal blue
- Multichip POW-LED RGB-W
- operating mode: constant current
- temperature controlled (onboard)
- surge protection
- light distribution especially for swimming pool lighting "asymmetric Mixflux"

...

- Constant-current power source/RGB-W-controller ordered separately
- Installation housing made of stainless steel 904L with 1.5 m cable protection tube
- Supplied with 5 m of special underwater cable

UNABHÄNGIG GEPRÜFT UND ZERTIFIZIERT. INDEPENDENTLY TESTED AND CERTIFIED. GEPRÜFT CERTIFIED

12 V-DC-NORMGERECHT BETRIEB ZULÄSSIG UNTER WASSER CONFORMING 12 V-DC STANDARD OPERATING UNDERWATER ZUGELASSEN UNTER WASSER 12 V-DC APPROVED UNDER WATER

ADDITIONAL PARTS

TIPP | IP65 | + | –

mounting housing
plastic, IP65, with 2 in/1 out, transparent cover,
suitable for power supply 5.0630.01.12 and RGB-W Controller 5.0630.09.52
9.0630.65.12

DMX DONGLE

DMX-Dongle
load resistance 120 Ohm
5.0670.09.65

PRODUCT LINE

4.0292 – Standard
Recessed spotlights
(underwater)
> Page 10

4.0291 – Retrofit
Recessed spotlights
(underwater)
> Page 18

4.0291.73 – Retrofit Saline
Recessed spotlights
(underwater)
> Page 22

< Project
vabali spa, Düsseldorf, Germany

RECESSED SPOTLIGHT
4.0292.73

UNDERWATER IP68

Installation housing

pressure flange
for thin-walled pools or pools with fitted plastic foil

gluing and pressure flange
for adhesive/foil coating with pressure flange

gluing flange
for adhesive/foil coating

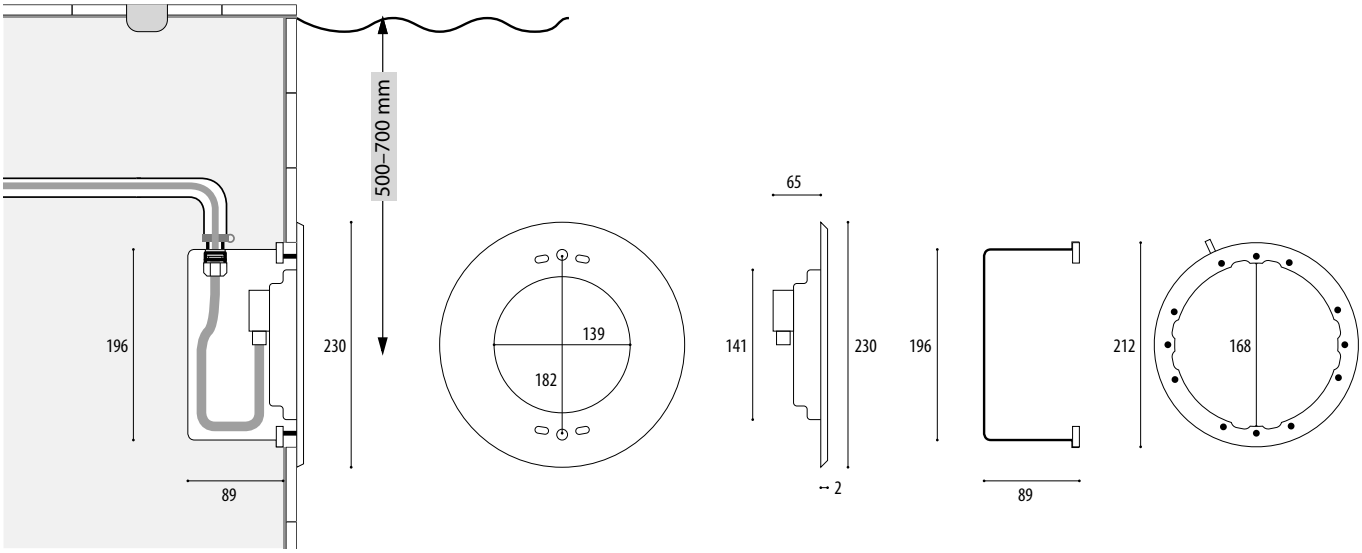

Article number	Lamps	Lumen	Light colour	Wattage	Current	Radation angle	UW-Cable, installs
ONLY UNDERWATER OPERATION							
STANDARD SALINE VERSION - NEW INSTALLATION IN COMBINATION WITH INSTALLATION HOUSING							
4.0292.73.11	12 POW-LED	6900 lm	6000K cold white	total 47 W	CC 3600mA @12 V-DC	asymmetrisch Mixflux	UW, 2x2,5 qmm
4.0292.73.12	12 POW-LED	5640 lm	3000K warm white	total 47 W	CC 3600mA @12 V-DC	asymmetrisch Mixflux	UW, 2x2,5 qmm
4.0292.73.13	12 POW-LED	6036 lm	4500K neutral white	total 47 W	CC 3600mA @12 V-DC	asymmetrisch Mixflux	UW, 2x2,5 qmm
4.0292.73.16	48 POW-LED		500mW/LED royal blue 450 nm	total 49,5 W	CC 3600mA @12 V-DC	asymmetrisch Mixflux	UW, 2x2,5 qmm
4.0292.73.41	12 Multichip POW-LED	cold white: 2100 lm	RGB-CW cold white 6000K	all on 75 W	CC 1400mA @12 V-DC	asymmetrisch Mixflux	UW, 1x4,0 + 4x1,0 + 2x0,25 qmm
4.0292.73.42	12 Multichip POW-LED	warm white: 1800 lm	RGB-WW warm white 3000K	all on 75 W	CC 1400mA @12 V-DC	asymmetrisch Mixflux	UW, 1x4,0 + 4x1,0 + 2x0,25 qmm
4.0292.73.43	12 Multichip POW-LED	neutral white: 1920 lm	RGB-NW neutral white 4500K	all on 75 W	CC 1400mA @12 V-DC	asymmetrisch Mixflux	UW, 1x4,0 + 4x1,0 + 2x0,25 qmm

INSTALLATION HOUSING

4.0292.01.73	saline version, made of V4A stainless steel with 1.5 m protective cable tube and M20 plastic terminating connection, for welding into stainless steel pools and for installation in concrete pools with tile covering
4.0292.02.73	saline version, made of V4A stainless steel with 1.5m protective cable tube and M20 plastic terminating connection, for installation in thin-walled pools and foil lined pools (pressure flange ø 234 mm)
4.0292.03.73	saline version, made of V4A stainless steel with 1.5 m protective cable tube and M20 plastic terminating connection, for installation in pools with adhesive/foil coating (adhesive flange ø 350 mm)

RECESSED SPOTLIGHT
4.0292.73

IP68 | UNDERWATER

6000K, Mixflux

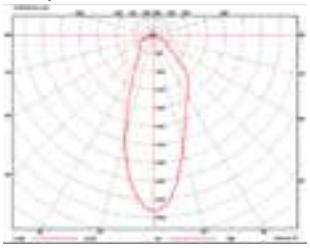

3000K, Mixflux

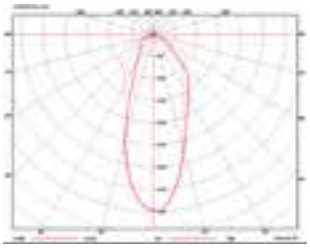

4500K, Mixflux

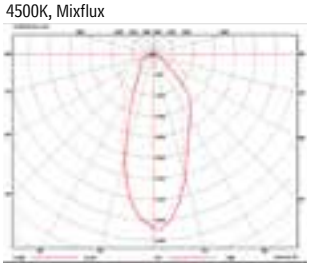

< Project
Hotel Traube Tonbach, Germany
www.morlock-fotografie.de

NOTE

Spotlights can (according to prior agreement) also be supplied without the connected cable to simplify installation with large cable lengths (up to max. 40m). The cable can be connected to the connection box without opening the spotlight.

Matching installation housing should be selected, depending on the installation type and situation.

OPTIONS

Possible beam angle POW-LED

15° | 30° | 45° | 120° | 15x50°

POW-LED monochrome, single colour in green, red, amber, blue, capri blue, 2700K

CUSTOM MADE

Individual configuration of the LED multichips possible

Power supplies Technical details see from page 234.

5.0630.01.12	Constant Current power supply, dimmable, max 1 spotlights	5.0630.03.12	Constant Current power supply, dimmable, max 3 spotlights	5.0630.10.12	Constant Current power supply, IP65, not dimmable, max 1 spotlights
5.0630.01.12		5.0630.03.12		5.0630.10.12	
5.0630.01.12		5.0630.03.12		5.0630.10.12	
5.0630.01.12		5.0630.03.12		5.0630.10.12	
5.0630.09.52	RGB-W-Controller, max 1 spotlights				
5.0630.09.52					
5.0630.09.52					

RECESSED SPOTLIGHT 4.0291

UNDERWATER | IP68

- New development
- Equivalent replacement for halogen (400 W)
- Up to 6900 lumen light intensity

4.0291 | RETROFIT-SPOTLIGHT

FOR RETROFITTING IN EXISTING SWIMMING POOLS WITH EXISTING WIBRE INSTALLATION HOUSING. AS RETROFIT FOR MANY OTHER BRANDS.

IP68 | STAINLESS STEEL V4A 1.4571 316Ti | POW-LED INCL. | 3.000 K 4.500 K 6.000 K BLUE | RGB-W | CONSTANT CURRENT KONSTANT STROM | DALI 1-10 V OPTIONAL DIMM | CABLE EXCL. | max 5m | CE | III

NEW SERIES
CENTUM°°
LIGHT UNDERWATER.
REDEFINED.
INFO ON PAGE 6

NEW

- Protection class IP68 – up to 5m water depth
- Entirely made of stainless steel 316Ti 1.4571, epolished
- Round attachment cover, made of stainless steel 316Ti, height 13 mm

...

- POW-LED cold white, warm white, neutral white
- POW-LED royal blue
- Multichip POW-LED RGB-W
- operating mode: constant current
- temperature controlled (onboard)
- surge protection
- light distribution especially for swimming pool lighting "asymmetric Mixflux"

...

- Constant-current power source/RGB-W-controller ordered separately
- Supplied without cable

UNABHÄNGIG GEPRÜFT UND ZERTIFIZIERT. INDEPENDENTLY TESTED AND CERTIFIED. THERMAL, ELECTRICAL, LIGHTING GEPRÜFT CERTIFIED LED INSTITUT DR. UWE SUBKE

12 V-DC-NORMGERECHT BETRIEB ZULÄSSIG UNTER WASSER CONFORMING 12 V-DC STANDARD OPERATING UNDERWATER ZUGELASSEN UNTER WASSER 12 V-DC APPROVED UNDER WATER

ADDITIONAL PARTS

2x2,5 qmm
ø 8,0 mm, per m
9.6150.02.25

1x4,0 + 4x1,0 + 2x0,25 qmm
ø 10.7 mm, per m
9.6150.04.41

2x4,0 qmm
ø 9,7 mm, per m
9.6150.02.40

DMX DONGLE
DMX-Dongle
load resistance 120 Ohm
5.0670.09.65

Fixation bracket
for built-in pot 4.0274 (Spotlight 4.0271, 4.0272, 4.0291)
9.0274.00.10

TIPP
IP65 + –
mounting housing
plastic, IP65, with 2 in/1 out, transparent cover,
suitable for power supply 5.0630.01.12 and RGB-W Controller 5.0630.09.52
9.0630.65.12

PRODUCT LINE

4.0291.73 – Retrofit Saline
Recessed spotlights
(underwater)
> Page 22

4.0292 – Standard
Recessed spotlights
(underwater)
> Page 10

4.0292.73 – Standard Saline
Recessed spotlights
(underwater)
> Page 14

< Project
Hotel Traube Tonbach, Germany
www.morlock-fotografie.de

RECESSED SPOTLIGHT 4.0291

UNDERWATER | IP68

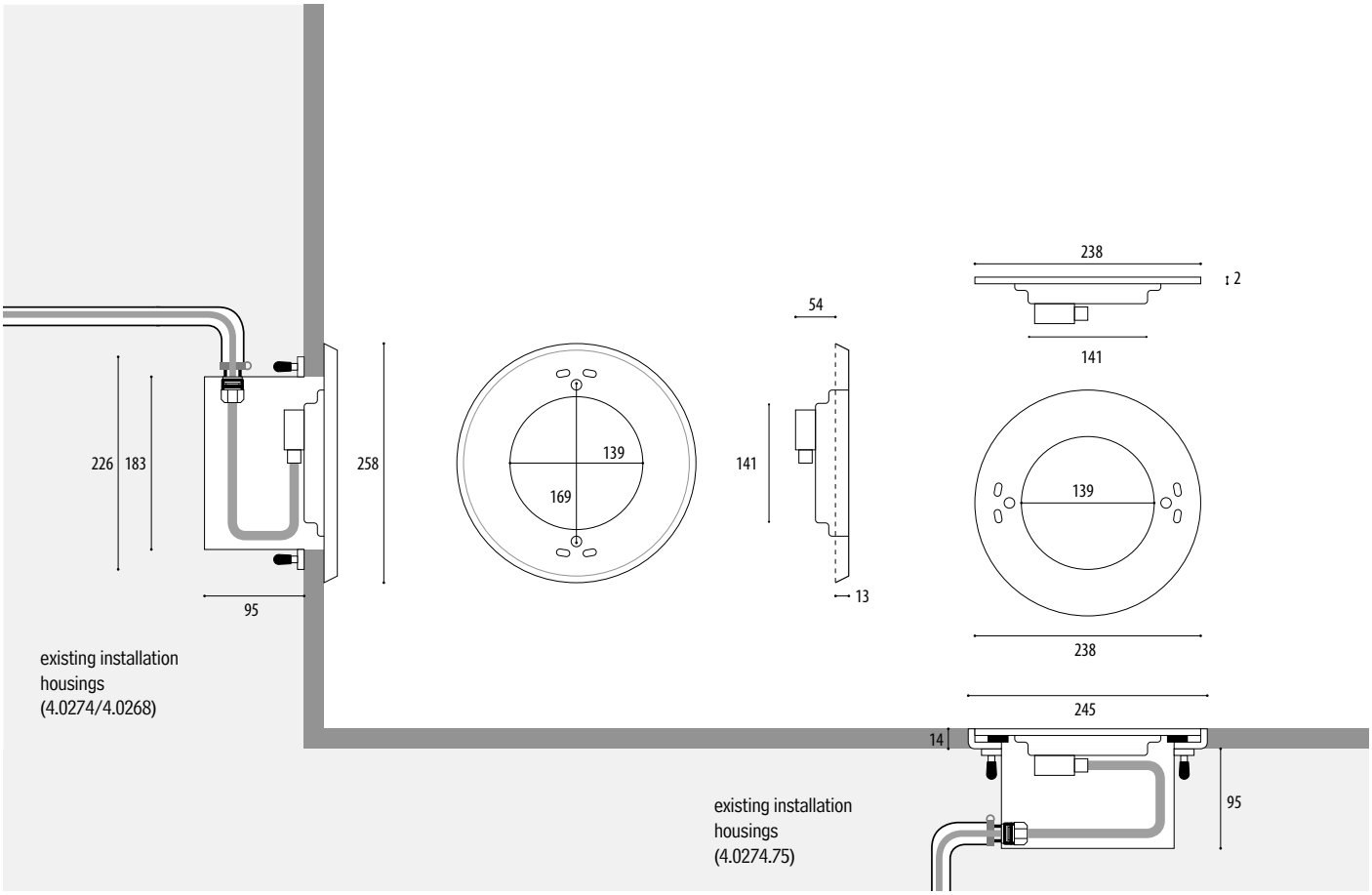

Article number	Lamps	Lumen	Light colour	Wattage	Current	Radation angle
ONLY UNDERWATER OPERATION						
STANDARD VERSION - RETROFIT INSTALLATION FOR INSTALLATION HOUSING 4.0274/4.0268						
4.0291.00.11	12 POW-LED	6900 lm	6000K cold white	total 47 W	CC 3600mA @12 V-DC	asymmetrisch Mixflux
4.0291.00.12	12 POW-LED	5640 lm	3000K warm white	total 47 W	CC 3600mA @12 V-DC	asymmetrisch Mixflux
4.0291.00.13	12 POW-LED	6036 lm	4500K neutral white	total 47 W	CC 3600mA @12 V-DC	asymmetrisch Mixflux
4.0291.00.16	48 POW-LED		500mW/LED royal blue 450 nm	total 49,5 W	CC 3600mA @12 V-DC	asymmetrisch Mixflux
4.0291.00.41	12 Multichip POW-LED	cold white: 2100 lm	RGB-CW cold white 6000K	all on 75 W	CC 1400mA @12 V-DC	asymmetrisch Mixflux
4.0291.00.42	12 Multichip POW-LED	warm white: 1800 lm	RGB-WW warm white 3000K	all on 75 W	CC 1400mA @12 V-DC	asymmetrisch Mixflux
4.0291.00.43	12 Multichip POW-LED	neutral white: 1920 lm	RGB-NW neutral white 4500K	all on 75 W	CC 1400mA @12 V-DC	asymmetrisch Mixflux
FLUSH MOUNTED VERSION - RETROFIT INSTALLATION FOR INSTALLATION HOUSING 4.0274.75						
4.0291.75.11	12 POW-LED	6900 lm	6000K cold white	total 47 W	CC 3600mA @12 V-DC	asymmetrisch Mixflux
4.0291.75.12	12 POW-LED	5640 lm	3000K warm white	total 47 W	CC 3600mA @12 V-DC	asymmetrisch Mixflux
4.0291.75.13	12 POW-LED	6036 lm	4500K neutral white	total 47 W	CC 3600mA @12 V-DC	asymmetrisch Mixflux
4.0291.75.16	48 POW-LED		500mW/LED royal blue 450 nm	total 49,5 W	CC 3600mA @12 V-DC	asymmetrisch Mixflux
4.0291.75.41	12 Multichip POW-LED	cold white: 2100 lm	RGB-CW cold white 6000K	all on 75 W	CC 1400mA @12 V-DC	asymmetrisch Mixflux
4.0291.75.42	12 Multichip POW-LED	warm white: 1800 lm	RGB-WW warm white 3000K	all on 75 W	CC 1400mA @12 V-DC	asymmetrisch Mixflux
4.0291.75.43	12 Multichip POW-LED	neutral white: 1920 lm	RGB-NW neutral white 4500K	all on 75 W	CC 1400mA @12 V-DC	asymmetrisch Mixflux

RECESSED SPOTLIGHT 4.0291

IP68 | UNDERWATER

6000K, Mixflux

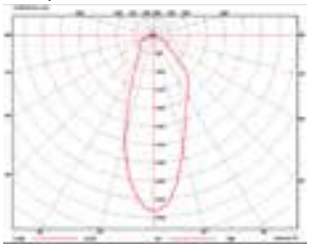

3000K, Mixflux

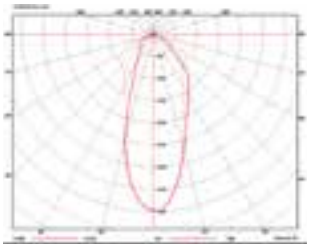

4500K, Mixflux

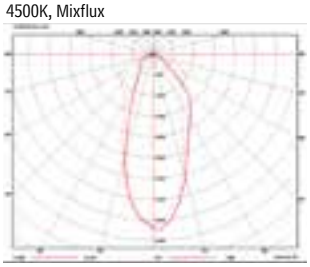

< Project
Actionbad Kokpunkten, Västerås, Sweden; Partner: Malux Sweden

NOTE

Versions with plastic component for retrofit installations available. For wall installation or flexible use on the edge of the pool.

Spotlights without connected cable for simple retrofitting of halogen to POW LED with use of the existing 2-pin cable (Only monochrome, cross section min. 2x2.5qmm). The cable can be connected to the connection box without opening the spotlight. Always observe the separate manual instructions.

RGB-W

In case of retrofitting to RGB-W version, the cable must be replaced with special underwater cable (9.6150.04.41).

Existing transformers must be replaced by appropriate power supply units and RGBW-controllers.

SOLE SALINE

Version for saline water see page 22

OPTIONS

Possible beam angle POW-LED

15° | 30° | 45° | 120° | 15x50°

POW-LED monochrome, single colour in green, red, amber, blue, capri blue, 2700K

CUSTOM MADE

Individual configuration of the LED multichips possible

Power supplies Technical details see from page 234.

5.0630.01.12 5.0630.01.12 5.0630.01.12 5.0630.01.12	Constant Current power supply, dimmable, max 1 spotlights	5.0630.03.12 5.0630.03.12 5.0630.03.12 5.0630.03.12	Constant Current power supply, dimmable, max 3 spotlights	5.0630.10.12 5.0630.10.12 5.0630.10.12 5.0630.10.12	Constant Current power supply, IP65, not dimmable, max 1 spotlights
5.0630.09.52 5.0630.09.52 5.0630.09.52	RGB-W-Controller, max 1 spotlights				

5.0630.01.12 5.0630.01.12 5.0630.01.12 5.0630.01.12	Constant Current power supply, dimmable, max 1 spotlights	5.0630.03.12 5.0630.03.12 5.0630.03.12 5.0630.03.12	Constant Current power supply, dimmable, max 3 spotlights	5.0630.10.12 5.0630.10.12 5.0630.10.12 5.0630.10.12	Constant Current power supply, IP65, not dimmable, max 1 spotlights
5.0630.09.52 5.0630.09.52 5.0630.09.52	RGB-W-Controller, max 1 spotlights				

RECESSED SPOTLIGHT
4.0291.73

UNDERWATER | IP68

- Equivalent replacement for halogen (400 W)
- Up to 6900 lumen light intensity
- For baths with increased brine concentration

4.0291.73 | RETROFIT-SPOTLIGHT

SALINE VERSION. FOR RETROFITTING IN EXISTING SWIMMING POOLS WITH EXISTING WIBRE INSTALLATION HOUSING. AS RETROFIT FOR MANY OTHER BRANDS.

IP68 | STAINLESS STEEL V4A 1.4539 904L | POW-LED INCL. | 3.000 K 4.500 K 6.000 K BLUE | RGB-W | CONSTANT CURRENT KONSTANT STROM | DALI 1-10 V OPTIONAL DIMM | CABLE EXCL. | max 5m | III

NEW SERIES
CENTUM°°
LIGHT UNDERWATER. REDEFINED.
INFO ON PAGE 6

NEW

- Protection class IP68 – up to 5m water depth
- special corrosion-proof version made marine grade 904L stainless steel 1.4539
- for pools with increased saltwater concentration (up to 3.5 %)
- Round attachment cover, made of stainless steel 904L, height 13 mm

...

- POW-LED cold white, warm white, neutral white
- POW-LED royal blue
- Multichip POW-LED RGB-W
- operating mode: constant current
- temperature controlled (onboard)
- surge protection
- light distribution especially for swimming pool lighting "asymmetric Mixflux"

...

- Constant-current power source/RGB-W-controller ordered separately
- Supplied without cable

UNABHÄNGIG GEPRÜFT UND ZERTIFIZIERT. INDEPENDENTLY TESTED AND CERTIFIED. GEPRÜFT CERTIFIED

12 V-DC-NORMGERECHT BETRIEB ZULÄSSIG UNTER WASSER CONFORMING 12 V-DC STANDARD OPERATING UNDERWATER ZUGELASSEN UNTER WASSER 12 V-DC APPROVED UNDER WATER

ADDITIONAL PARTS

2x2,5 qmm
ø 8,0 mm, per m
9.6150.02.25

1x4,0 + 4x1,0 + 2x0,25 qmm
ø 10.7 mm, per m
9.6150.04.41

2x4,0 qmm
ø 9,7 mm, per m
9.6150.02.40

DMX DONGLE
DMX-Dongle
load resistance 120 Ohm
5.0670.09.65

Fixation bracket
saline version, for built-in pot 4.0274.73 (Spotlight 4.0271, 4.0272, 4.0291)
9.0274.73.10

TIPP
IP65 + –
mounting housing
plastic, IP65, with 2 in/1 out, transparent cover,
suitable for power supply 5.0630.01.12 and RGB-W Controller 5.0630.09.52
9.0630.65.12

PRODUCT LINE

4.0291 – Retrofit
Recessed spotlights (underwater)
> Page 18

4.0292 – Standard
Recessed spotlights (underwater)
> Page 10

4.0292.73 – Standard Saline
Recessed spotlights (underwater)
> Page 14

< Project
Tauern Spa Kaprun, Austria
Photo: Photoart Reifmüller

RECESSED SPOTLIGHT
4.0291.73

UNDERWATER | IP68

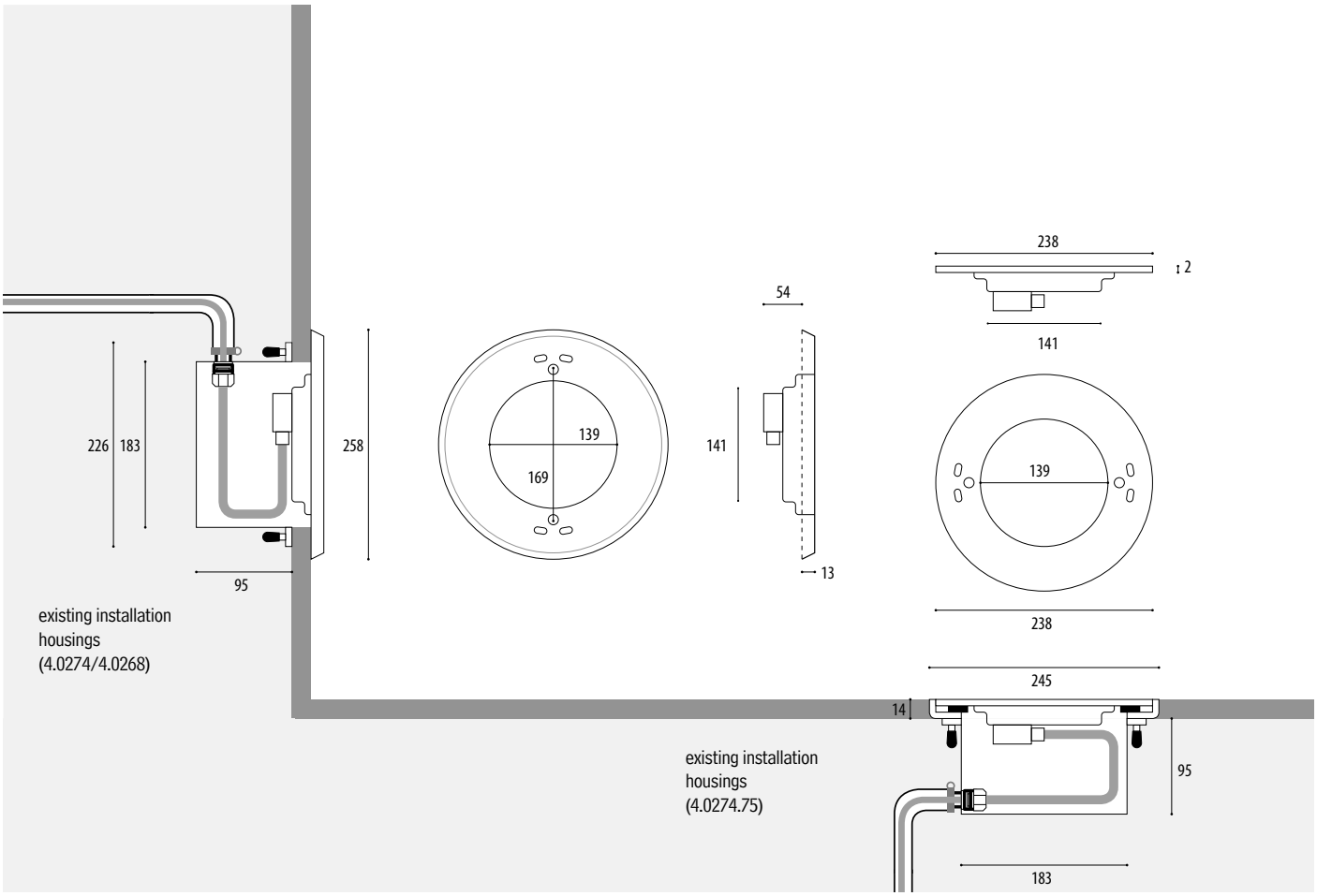

Article number	Lamps	Lumen	Light colour	Wattage	Current	Radation angle
ONLY UNDERWATER OPERATION						
STANDARD SALINE VERSION - RETROFIT INSTALLATION FOR INSTALLATION HOUSING 4.0274/4.0268						
4.0291.73.11	12 POW-LED	6900 lm	6000K cold white	total 47 W	CC 3600mA @12 V-DC	asymmetrisch Mixflux
4.0291.73.12	12 POW-LED	5640 lm	3000K warm white	total 47 W	CC 3600mA @12 V-DC	asymmetrisch Mixflux
4.0291.73.13	12 POW-LED	6036 lm	4500K neutral white	total 47 W	CC 3600mA @12 V-DC	asymmetrisch Mixflux
4.0291.73.16	48 POW-LED		500mW/LED royal blue 450 nm	total 49,5 W	CC 3600mA @12 V-DC	asymmetrisch Mixflux
4.0291.73.41	12 Multichip POW-LED	cold white: 2100 lm	RGB-CW cold white 6000K	all on 75 W	CC 1400mA @12 V-DC	asymmetrisch Mixflux
4.0291.73.42	12 Multichip POW-LED	warm white: 1800 lm	RGB-WW warm white 3000K	all on 75 W	CC 1400mA @12 V-DC	asymmetrisch Mixflux
4.0291.73.43	12 Multichip POW-LED	neutral white: 1920 lm	RGB-NW neutral white 4500K	all on 75 W	CC 1400mA @12 V-DC	asymmetrisch Mixflux
FLUSH MOUNTED SALINE VERSION - RETROFIT INSTALLATION FOR INSTALLATION HOUSING 4.0274.75						
4.0291.78.11	12 POW-LED	6900 lm	6000K cold white	total 47 W	CC 3600mA @12 V-DC	asymmetrisch Mixflux
4.0291.78.12	12 POW-LED	5640 lm	3000K warm white	total 47 W	CC 3600mA @12 V-DC	asymmetrisch Mixflux
4.0291.78.13	12 POW-LED	6036 lm	4500K neutral white	total 47 W	CC 3600mA @12 V-DC	asymmetrisch Mixflux
4.0291.78.16	48 POW-LED		500mW/LED royal blue 450 nm	total 49,5 W	CC 3600mA @12 V-DC	asymmetrisch Mixflux
4.0291.78.41	12 Multichip POW-LED	cold white: 2100 lm	RGB-CW cold white 6000K	all on 75 W	CC 1400mA @12 V-DC	asymmetrisch Mixflux
4.0291.78.42	12 Multichip POW-LED	warm white: 1800 lm	RGB-WW warm white 3000K	all on 75 W	CC 1400mA @12 V-DC	asymmetrisch Mixflux
4.0291.78.43	12 Multichip POW-LED	neutral white: 1920 lm	RGB-NW neutral white 4500K	all on 75 W	CC 1400mA @12 V-DC	asymmetrisch Mixflux

RECESSED SPOTLIGHT
4.0291.73

IP68 | UNDERWATER

6000K, Mixflux

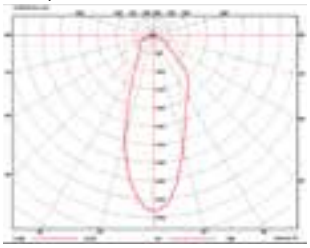

3000K, Mixflux

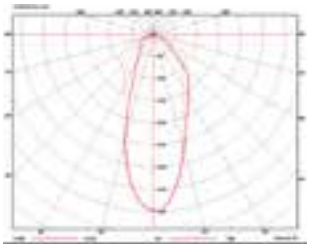

4500K, Mixflux

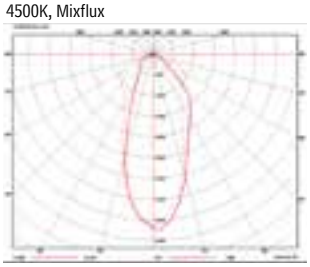

< Project
JW Marriott, Sahar Airport, Mumbai, India
Lighting Designer: GA DESIGN CONSULTANS, Mrs. Kiran Ganti
Customer: Versalite; Planner: ILD

NOTE

Spotlights without connected cable for simple retrofitting of halogen to POW LED with use of the existing 2-pin cable (Only monochrome, cross section min. 2x2.5qmm). The cable can be connected to the connection box without opening the spotlight. Always observe the separate manual instructions.

RGB-W

In case of retrofitting to RGB-W version, the cable must be replaced with special underwater cable (9.6150.04.41).

Existing transformers must be replaced by appropriate power supply units and RGBW-controllers.

OPTIONS

Possible beam angle POW-LED

15° | 30° | 45° | 120° | 15x50°

POW-LED monochrome, single colour in green, red, amber, blue, capri blue, 2700K

CUSTOM MADE

Individual configuration of the LED multichips possible

Power supplies Technical details see from page 234.

5.0630.01.12	Constant Current power supply, dimmable, max 1 spotlights	5.0630.03.12	Constant Current power supply, dimmable, max 3 spotlights	5.0630.10.12	Constant Current power supply, IP65, not dimmable, max 1 spotlights
5.0630.01.12		5.0630.03.12		5.0630.10.12	
5.0630.01.12		5.0630.03.12		5.0630.10.12	
5.0630.01.12		5.0630.03.12		5.0630.10.12	
5.0630.09.52	RGB-W-Controller, max 1 spotlights				
5.0630.09.52					
5.0630.09.52					

5.0630.01.12	Constant Current power supply, dimmable, max 1 spotlights	5.0630.03.12	Constant Current power supply, dimmable, max 3 spotlights	5.0630.10.12	Constant Current power supply, IP65, not dimmable, max 1 spotlights
5.0630.01.12		5.0630.03.12		5.0630.10.12	
5.0630.01.12		5.0630.03.12		5.0630.10.12	
5.0630.01.12		5.0630.03.12		5.0630.10.12	
5.0630.09.52	RGB-W-Controller, max 1 spotlights				
5.0630.09.52					
5.0630.09.52					

RECESSED SPOTLIGHT 4.0202

UNDERWATER | IP68

- New development
- Up to 4600 lumen light intensity
- Ideal for hotel pools and private pools

4.0202 | SWIMMINGPOOL-LIGHT

FOR ILLUMINATING SMALL AND MEDIUM SWIMMING POOLS.

IP68 | STAINLESS STEEL V4A 1.4571 316Ti | POW-LED INCL. | 3.000 K 4.500 K 6.000 K BLUE | RGB-W | CONSTANT CURRENT KONSTANT STROM | DALI 1-10 V OPTIONAL DIMM | CABLE INCL. | max 5m

NEW SERIES

CENTUM°°

LIGHT UNDERWATER.
REDEFINED.

INFO ON PAGE 6

NEW

· Protection class IP68 – up to 5m water depth
· Entirely made of stainless steel 316Ti 1.4571, epolished
· Round attachment cover, made of stainless steel 316Ti, height 2 mm
...
· POW-LED cold white, warm white, neutral white
· POW-LED royal blue
· Multichip POW-LED RGB-W
· operating mode: constant current
· temperature controlled (onboard)
· surge protection
· rotationally symmetric wide light distribution
...
· Constant-current power source/RGB-W-controller ordered separately
· Installation housing made of stainless steel 316Ti with 1.5 m cable protection tube
· Supplied with 5 m of special underwater cable

12 V-DC-NORMGERECHT BETRIEB ZULÄSSIG UNTER WASSER
CONFORMING 12 V-DC STANDARD OPERATING UNDERWATER
ZUGELASSEN UNTER WASSER
12 V-DC
APPROVED UNDER WATER

ADDITIONAL PARTS

TIPP

glass disc, frosted
for softer light distribution (light loss approx. -15%)
50.40202.0002

< Project
Alpin Panorama Hotel Hubertus, Bozen, Italy
Client: Herokal, Bozen
Photo: Alex Filz

RECESSED SPOTLIGHT 4.0202

UNDERWATER

IP68

Installation housing

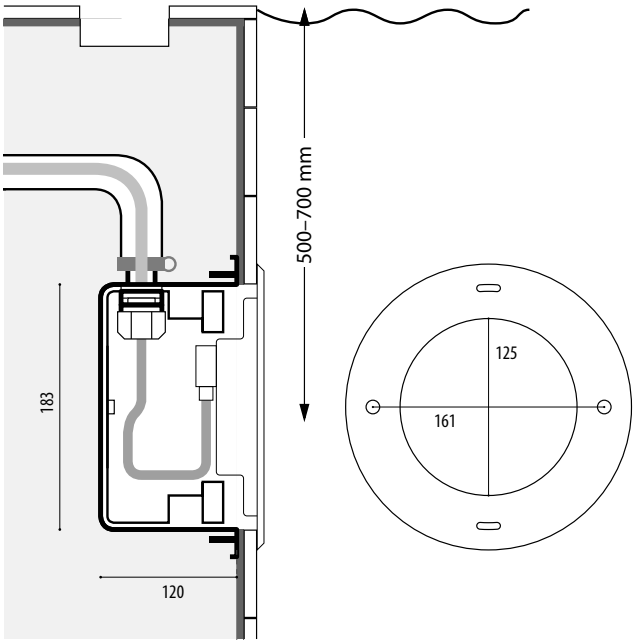

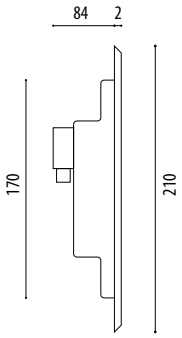

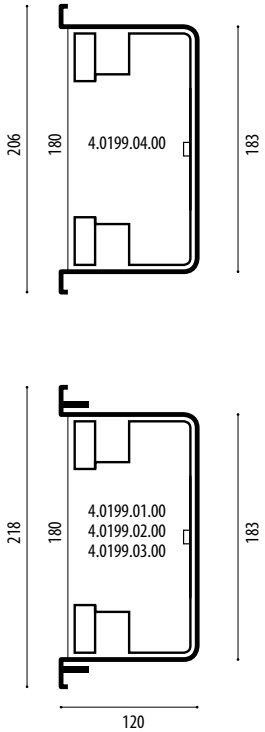

Article number	Lamps	Lumen	Light colour	Wattage	Current	Radation angle	Cable, installs
ONLY UNDERWATER OPERATION							
4.0202.00.11	8 POW-LED	4600 lm	6.000K cold white	total 31 W	CC 2400mA @12 V-DC	50° symmetrisch	UW, 2x2,5 qmm
4.0202.00.12	8 POW-LED	3760 lm	3.000K warm white	total 31 W	CC 2400mA @12 V-DC	50° symmetrisch	UW, 2x2,5 qmm
4.0202.00.13	8 POW-LED	4024 lm	4.500K neutral white	total 31 W	CC 2400mA @12 V-DC	50° symmetrisch	UW, 2x2,5 qmm
4.0202.00.16	8 POW-LED	500mW/LED	royal blue (450 nm)	total 33 W	CC 2400mA @12 V-DC	50° symmetrisch	UW, 2x2,5 qmm
4.0202.00.41	8 Multichip POW-LED	cold white: 1160 lm	RGB-CW cold white 6000K	all on 50 W	CC 700mA @12 V-DC	50° symmetrisch	UW, 10x0,5 qmm
4.0202.00.42	8 Multichip POW-LED	warm white: 1000 lm	RGB-WW warm white 3000K	all on 50 W	CC 700mA @12 V-DC	50° symmetrisch	UW, 10x0,5 qmm
4.0202.00.43	8 Multichip POW-LED	neutral white: 1080 lm	RGB-NW neutral white 4500K	all on 50 W	CC 700mA @12 V-DC	50° symmetrisch	UW, 10x0,5 qmm

INSTALLATION HOUSING

4.0199.01.00	made of V4A stainless steel with 1.5 m protective cable tube and M20 plastic terminating connection, for installation in concrete pools with tile covering
4.0199.02.00	made of V4A stainless steel with 1.5m protective cable tube and M20 plastic terminating connection, for installation in thin-walled pools and foil lined pools (pressure flange ø 218 mm)
4.0199.03.00	made of V4A stainless steel with 1.5 m protective cable tube and M20 plastic terminating connection, for installation in pools with adhesive/foil coating (adhesive flange ø 360 mm)
4.0199.04.00	made of V4A stainless steel with 1.5 m protective cable tube and M20 plastic terminating connection, for facing concrete and for welding into stainless steel pools

RECESSED SPOTLIGHT 4.0202

IP68 | UNDERWATER

< Project
Private pool, Lucerne, Switzerland
Copyright: Timo Schwach Photography

	Power supplies	Technical details see from page 234.
	5.0630.10.08	
	5.0630.10.08	Constant Current power supply, max 1 spotlights
	5.0630.10.08	
	5.0630.10.08	
	5.0670.19.52	
	5.0670.19.52	RGB-W-Controller, max 1 spotlights
	5.0670.19.52	

NOTE

Matching installation housing should be selected, depending on the installation type and situation.

For facing concrete please use housing 4.0199.04.00

OPTIONS

Possible beam angle POW-LED

15° | 30° | 45° | 120° | 15x50°

POW-LED monochrome, single colour in green, red, amber, blue, capri blue, 2700K

Asymmetric light distribution especially for swimming pool lighting from a water depth of >1.80 m

DYNAMIC WHITE

Dynamic White possible (3000-6000°K)

RECESSED SPOTLIGHT 4.0102

UNDERWATER | IP68

- New development
- Up to 2300 lumen light intensity
- Ideal for organic-shaped pools and private pools

4.0102 | RECESSED-SPOTLIGHT

FOR ILLUMINATING SMALL AND MEDIUM SWIMMING POOLS AND WATER FEATURES

IP68 | STAINLESS STEEL V4A 1.4571 316Ti | ELECTRO POLISHED | POW-LED INCL. | 3.000 K 4.500 K 6.000 K | RGB-W | DYNAMIC WHITE | DALI 1-10 V OPTIONAL DIMM | CONSTANT CURRENT KONSTANT STROM | CABLE INCL. | max 5m

NEW SERIES
CENTUM°°
LIGHT UNDERWATER.
REDEFINED.
INFO ON PAGE 6

NEW

- Protection class IP68 – up to 5m water depth
- Entirely made of stainless steel 316Ti 1.4571, epolished
- Round and square attachment cover, made of stainless steel 316Ti, height 2 mm

...

- POW-LED cold white, warm white, neutral white
- Multichip POW-LED RGB-W
- Multichip POW-LED dynamic white
- operating mode: constant current
- temperature controlled (onboard)
- surge protection
- Rotationally symmetric light distribution

...

- Constant-current power source/RGB-W-controller ordered separately
- Installation housing made of stainless steel 316Ti with 1.5 m cable protection tube
- Supplied with 3 m of special underwater cable

12 V-DC-NORMGERECHT BETRIEB ZULÄSSIG UNTER WASSER
CONFORMING 12 V-DC STANDARD OPERATING UNDERWATER
ZUGELASSEN UNTER WASSER
12 V-DC
APPROVED UNDER WATER

ADDITIONAL PARTS

TIPP

glass disc, frosted
for softer light distribution (light loss approx. -15%)
50.40102.0002

anti-glare louver
black, for POW-LED
35.40100.0001

PRODUCT LINE

4.0100
Surface spotlights
> Page 44

< Project
Crown Towers, Perth, Australia
Partner: Form and Light Pty. Ltd; Think Lighting
Lightpartner: Elektrolight, Melbourne; Photo: George Apostolidis

RECESSED SPOTLIGHT 4.0102

UNDERWATER IP68

Installation housing

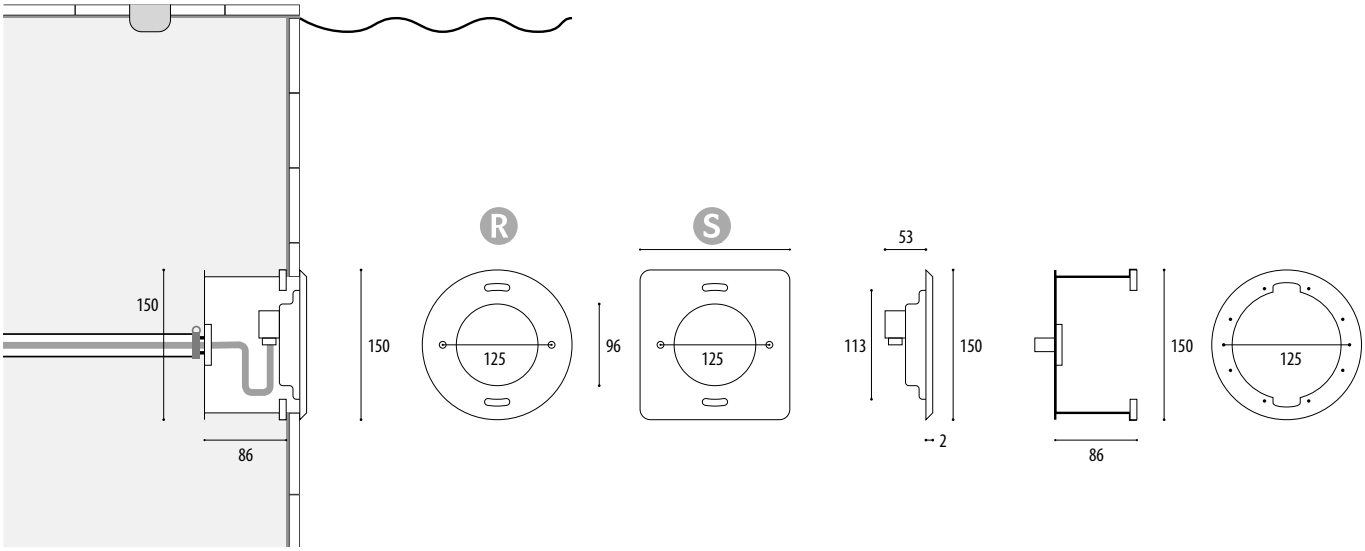

Article number	Lamps	Lumen	Light colour	Wattage	Current	Radation angle	Cable, installs
ONLY UNDERWATER OPERATION							
Ⓡ CIRCULAR COVER							
4.0102.20.11	4 POW-LED	2300 lm	6000K cold white	total 18 W	CC 1200mA @12 V-DC	30° medium	UW, 2x1,5 qmm
4.0102.20.12	4 POW-LED	1880 lm	3000K warm white	total 18 W	CC 1200mA @12 V-DC	30° medium	UW, 2x1,5 qmm
4.0102.20.13	4 POW-LED	2010 lm	4500K neutral white	total 18 W	CC 1200mA @12 V-DC	30° medium	UW, 2x1,5 qmm
4.0102.20.41	4 Multichip POW-LED	cold white: 580 lm	RGB-CW cold white 6000K	all on 17 W	CC 350mA @12 V-DC	30° medium	UW, 8x0,5 qmm
4.0102.20.42	4 Multichip POW-LED	warm white: 500 lm	RGB-WW warm white 3000K	all on 17 W	CC 350mA @12 V-DC	30° medium	UW, 8x0,5 qmm
4.0102.20.43	4 Multichip POW-LED	neutral white: 540 lm	RGB-NW neutral white 4500K	all on 17 W	CC 350mA @12 V-DC	30° medium	UW, 8x0,5 qmm
4.0102.20.80	4 Multichip POW-LED	1000-1160 lm	3000K-6000K dynamic white	all on 17 W	CC 350mA @12 V-DC	30° medium	UW, 8x0,5 qmm
Ⓢ SQUARED COVER							
4.0102.40.11	4 POW-LED	2300 lm	6000K cold white	total 18 W	CC 1200mA @12 V-DC	30° medium	UW, 2x1,5 qmm
4.0102.40.12	4 POW-LED	1880 lm	3000K warm white	total 18 W	CC 1200mA @12 V-DC	30° medium	UW, 2x1,5 qmm
4.0102.40.13	4 POW-LED	2010 lm	4500K neutral white	total 18 W	CC 1200mA @12 V-DC	30° medium	UW, 2x1,5 qmm
4.0102.40.41	4 Multichip POW-LED	cold white: 580 lm	RGB-CW cold white 6000K	all on 17 W	CC 350mA @12 V-DC	30° medium	UW, 8x0,5 qmm
4.0102.40.42	4 Multichip POW-LED	warm white: 500 lm	RGB-WW warm white 3000K	all on 17 W	CC 350mA @12 V-DC	30° medium	UW, 8x0,5 qmm
4.0102.40.43	4 Multichip POW-LED	neutral white: 540 lm	RGB-NW neutral white 4500K	all on 17 W	CC 350mA @12 V-DC	30° medium	UW, 8x0,5 qmm
4.0102.40.80	4 Multichip POW-LED	1000-1160 lm	3000K-6000K dynamic white	all on 17 W	CC 350mA @12 V-DC	30° medium	UW, 8x0,5 qmm

INSTALLATION HOUSING	
4.0102.01.00	for round and squared cover, made of V4A stainless steel with 1.5 m protective cable tube and M20 plastic terminating connection, for welding into stainless steel pools and for installation in concrete pools with tile covering
4.0102.02.00	for round cover, made of V4A stainless steel with 1.5m protective cable tube and M20 plastic terminating connection, for installation in thin-walled pools and foil lined pools (pressure flange ø 155 mm)
4.0102.02.40	for squared cover, made of V4A stainless steel with 1.5m protective cable tube and M20 plastic terminating connection, for installation in thin-walled pools and foil lined pools (pressure flange 155 x 155 mm)
4.0102.03.00	for round and squared cover, made of V4A stainless steel with 1.5 m protective cable tube and M20 plastic terminating connection, for installation in pools with adhesive/foil coating (adhesive flange ø 250 mm)

IP68 UNDERWATER

< Project
Actionbad Kokpunkten, Västerås, Sweden
Partner: Malux Sweden

Power supplies Technical details see from page 234.

5.0630.10.04	Constant Current power supply, max 1 spotlights	5.0630.00.04	Constant Current power supply, without mounting housing max 1 spotlights
5.0630.10.04		5.0630.00.04	
5.0630.10.04		5.0630.00.04	
5.0635.19.52	RGB-W-Controller, 12 V-DC-Norm: max 1 spotlights SELV-Norm: max 3 spotlights		
5.0635.19.52			
5.0635.19.52			
5.0635.19.52			

5.0630.10.04	Constant Current power supply, max 1 spotlights	5.0630.00.04	Constant Current power supply, without mounting housing max 1 spotlights
5.0630.10.04		5.0630.00.04	
5.0630.10.04		5.0630.00.04	
5.0635.19.52	RGB-W-Controller, 12 V-DC-Norm: max 1 spotlights SELV-Norm: max 3 spotlights		
5.0635.19.52			
5.0635.19.52			
5.0635.19.52			

NOTE

Matching installation housing should be selected, depending on the installation type and situation.

SOLE SALINE

SALINE version possible - Article number with additional „S" at the end

OPTIONS

Possible beam angle POW-LED

15° 30° 45° 120° 15x50°

POW-LED monochrome, single colour in green, red, amber, blue, 2700K

RECESSED SPOTLIGHT 4.0052

UNDERWATER | IP68

- Small and powerful
- Up to 675 lumen light intensity
- Perfect for accentuation

4.0052 | RECESSED-SPOTLIGHT

FOR ILLUMINATING SMALL OR MEDIUM POOLS, JACUZZIS AND WATER FEATURES.

IP68 | STAINLESS STEEL V4A 1.4571 316Ti | ELECTRO POLISHED | POW-LED INCL. | 3.000 K 4.500 K 6.000 K | RGB-W | DYNAMIC WHITE | DALI 1-10 V OPTIONAL DIMM | CONSTANT CURRENT KONSTANT STROM | CABLE INCL. | max 5m

NEW SERIES

CENTUM°°

LIGHT UNDERWATER. REDEFINED.

INFO ON PAGE 6

NEW

- Protection class IP68 – up to 5m water depth
- Entirely made of stainless steel 316Ti 1.4571
- Round attachment cover, made of stainless steel 316Ti, height 2 mm

...

- POW-LED cold white, warm white, neutral white
- Multichip POW-LED RGB-W
- Multichip POW-LED dynamic white
- operating mode: constant current
- Rotationally symmetric light distribution

...

- Cable pressure sleeve, stainless steel 316Ti
- Constant-current power source/RGB-W-controller external
- Installation housing made of stainless steel 316Ti with 1.5 m cable protection tube
- Supplied with lamp and 3m of underwater cable

12 V-DC-NORMGERECHT BETRIEB ZULÄSSIG UNTER WASSER
CONFORMING 12 V-DC STANDARD OPERATING UNDERWATER
ZUGELASSEN UNTER WASSER
12 V-DC
APPROVED UNDER WATER

ADDITIONAL PARTS

TIPP

Jellyglass, frosted
Dome shape, height 9 mm
50.40050.0002

glass disc, frosted
for softer light distribution (light loss approx. -15%)
50.40052.0002

anti-glare louver
black, for POW-LED
35.40050.0001

PRODUCT LINE

4.0050
Surface spotlights
> Page 40

< Project
Park Hyatt Bangkok, Thailand
Client: MosaicEins
Lighting design: Inverse Lighting Design

RECESSED SPOTLIGHT 4.0052

UNDERWATER

IP68

Installation housing

Jellyglass

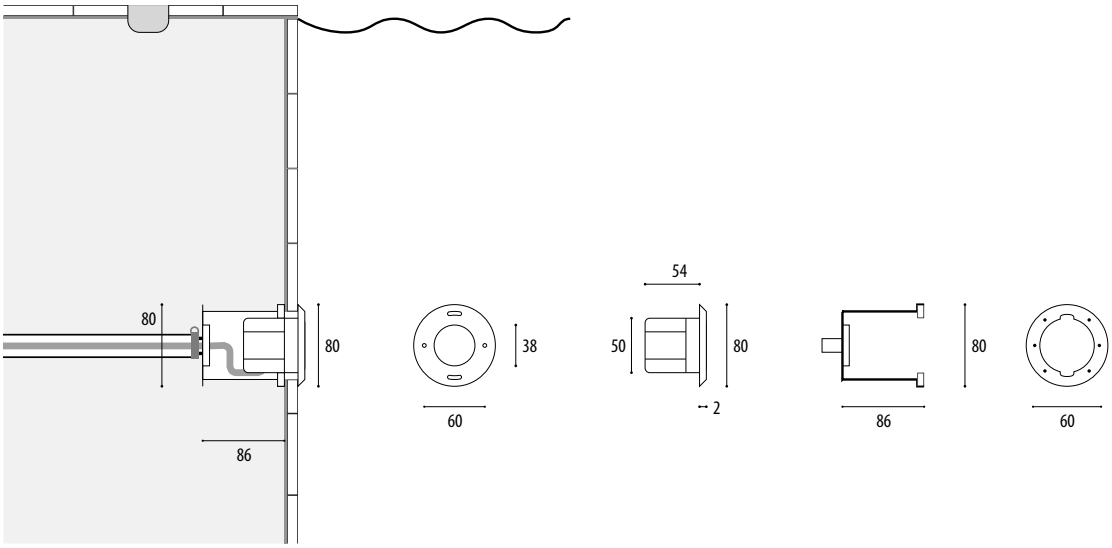

Article number	Lamps	Lumen	Light colour	Wattage	Current	Radation angle	Cable, installs
ONLY UNDERWATER OPERATION							
CIRCULAR COVER							
4.0052.20.11	1 POW-LED	675 lm	6.000K cold white	total 5 W	CC 350mA @12 V-DC	25° medium-spot	UW, 2x0,5 qmm
4.0052.20.12	1 POW-LED	540 lm	3.000K warm white	total 5 W	CC 350mA @12 V-DC	25° medium-spot	UW, 2x0,5 qmm
4.0052.20.13	1 POW-LED	575 lm	4.500K neutral white	total 5 W	CC 350mA @12 V-DC	25° medium-spot	UW, 2x0,5 qmm
4.0052.20.41	1 Multichip POW-LED	cold white: 145 lm	RGB-CW cold white 6000K	all on 4 W	CC 350mA @12 V-DC	25° medium-spot	UW, 8x0,5 qmm
4.0052.20.42	1 Multichip POW-LED	warm white: 125 lm	RGB-WW warm white 3000K	all on 4 W	CC 350mA @12 V-DC	25° medium-spot	UW, 8x0,5 qmm
4.0052.20.43	1 Multichip POW-LED	neutral white: 135 lm	RGB-NW neutral white 4500K	all on 4 W	CC 350mA @12 V-DC	25° medium-spot	UW, 8x0,5 qmm
4.0052.20.80	1 Multichip POW-LED	250-290 lm	3000K-6000K dynamic white	all on 4 W	CC 350mA @12 V-DC	25° medium-spot	UW, 8x0,5 qmm

INSTALLATION HOUSING	
4.0052.01.00	made of V4A stainless steel with 1.5 m protective cable tube and M20 plastic terminating connection, for wall installation, for welding into stainless steel pools and for installation in concrete pools with tile covering (Flange ø 80 mm)
4.0052.02.00	made of V4A stainless steel with 1.5m protective cable tube and M20 plastic terminating connection, for wall installation, for installation in thin-walled pools and foil lined pools (pressure flange ø 84 mm)
4.0052.03.00	made of V4A stainless steel with 1.5 m protective cable tube and M20 plastic terminating connection, for wall installation, for installation in pools with adhesive/foil coating (adhesive flange ø 150 mm)
4.0052.05.00	made of V4A stainless steel with 1.5 m protective cable tube and M20 plastic terminating connection, for installation in the ground up to water depth 1,30 m, for welding into stainless steel pools and for installation in concrete pools with tile covering (Housing depth 110 mm, base plate ø 120 mm with fixing/alignment possibility, flange ø 80 mm)

RECESSED SPOTLIGHT 4.0052

IP68 | UNDERWATER

< Project
vabali spa, Düsseldorf, Germany

Power supplies Technical details see from page 234.

5.0635.65.10	Constant Current power supply, max 1 spotlights	5.0635.65.20	Constant Current power supply, max 3 spotlights
5.0635.65.10		5.0635.65.20	
5.0635.65.10		5.0635.65.20	
5.0635.19.52	RGB-W-Controller, 12 V-DC-Norm: max 3 spotlights SELV-Norm: max 12 spotlights		
5.0635.19.52			
5.0635.19.52			
5.0635.19.52			

NOTE

Matching installation housing should be selected, depending on the installation type and situation.

SOLE SALINE

SALINE version possible - Article number with additional „S" at the end

OPTIONS

Possible beam angle POW-LED

15° 25° 45° 120°

POW-LED monochrome, single colour in green, red, amber, blue, 2700K

CENTUM°°
SURFACE SPOTLIGHTS
UNDERWATER | EXTERIOR

PAGES 38-47

SURFACE SPOTLIGHT 4.0050

UNDERWATER | EXTERIOR | IP68

- Small and powerful
- Up to 675 lumen light intensity
- Perfect for fountains and water attractions

4.0050 | SURFACE-MOUNTED SPOTLIGHT

FOR ILLUMINATING SMALL OR MEDIUM FOUNTAINS AND WATER FEATURES.

IP68 | STAINLESS STEEL V4A 1.4571 316Ti | ELECTRO POLISHED | POW-LED INCL. | 3.000 K 4.500 K 6.000 K | RGB-W | DYNAMIC WHITE | CONSTANT CURRENT KONSTANT STROM | DALI 1-10 V OPTIONAL DIMM | CABLE INCL. | max 3m | 90°

NEW SERIES

CENTUM°°

LIGHT UNDERWATER. REDEFINED.

INFO ON PAGE 6

NEW

- Protection class IP68 – up to 3m water depth
- Entirely made of stainless steel 316Ti 1.4571
- Mounting foot adjustable through 90°

...

- POW-LED cold white, warm white, neutral white
- Multichip POW-LED RGB-W
- Multichip POW-LED dynamic white
- operating mode: constant current
- Rotationally symmetric light distribution

...

- Cable pressure sleeve, stainless steel 316Ti
- Constant-current power source/RGB controller external
- Supplied with lamp and 3m of underwater cable

12 V-DC-NORMGERECHT BETRIEB ZULÄSSIG UNTER WASSER
CONFORMING 12 V-DC STANDARD OPERATING UNDERWATER
ZUGELASSEN UNTER WASSER
12 V-DC
APPROVED UNDER WATER

ADDITIONAL PARTS

TIPP

Anti-glare ring
1/2-Version, Stainless steel 316Ti, ø 57mm, length 70mm
9.0050.00.70

Anti-glare ring
1/1-Version, Stainless steel 316Ti,
ø 57 mm, length 70 mm
9.0050.10.70

glass disc, frosted
for softer light distribution (light loss approx. -15%)
50.40050.0003

230 V

Surface housing IP67
Stainless steel 316Ti,
for 230 V-connection
9.0050.21.10

anti-glare louver
black, for POW-LED
35.40050.0001

Extension arm
Stainless steel 316Ti, length 750 mm
9.0050.21.20

spike
stainless steel, 205 mm
9.0050.20.00

PRODUCT LINE

4.0052
Recessed spotlights
(underwater)
> Page 34

< Project
Brunssum, Netherlands
Lighting Design: Studio DL
Photos: Dirk-Andre Betz, Kaffee, Milch & Zucker

SURFACE SPOTLIGHT 4.0050

UNDERWATER | EXTERIOR IP68

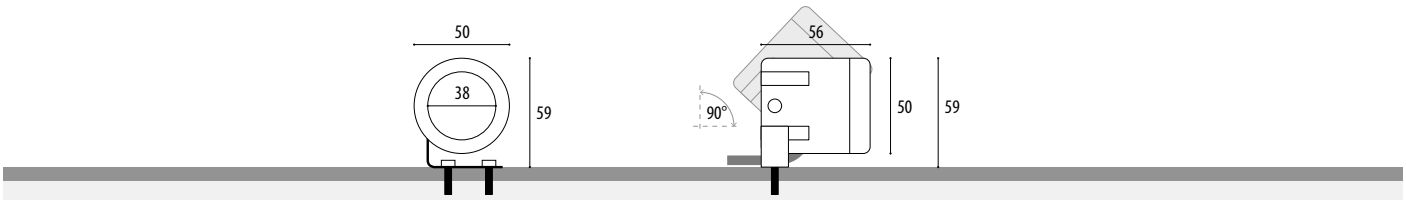

Article number	Lamps	Lumen	Light colour	Wattage	Current	Radation angle	Cable, installs
VERSIONS: UNDER- AND OVERWATER OPERATION (ACCORDING TO PRIOR AGREEMENT)							
4.0050.30.11	1 POW-LED	675 lm	6.000K cold white	total 5 W	CC 350mA @12 V-DC	25° medium-spot	UW, 2x0,5 qmm
4.0050.30.12	1 POW-LED	540 lm	3.000K warm white	total 5 W	CC 350mA @12 V-DC	25° medium-spot	UW, 2x0,5 qmm
4.0050.30.13	1 POW-LED	575 lm	4.500K neutral white	total 5 W	CC 350mA @12 V-DC	25° medium-spot	UW, 2x0,5 qmm
4.0050.30.41	1 Multichip POW-LED	cold white: 145 lm	RGB-CW cold white 6000K	all on 4 W	CC 350mA @12 V-DC	25° medium-spot	UW, 8x0,5 qmm
4.0050.30.42	1 Multichip POW-LED	warm white: 125 lm	RGB-WW warm white 3000K	all on 4 W	CC 350mA @12 V-DC	25° medium-spot	UW, 8x0,5 qmm
4.0050.30.43	1 Multichip POW-LED	neutral white: 135 lm	RGB-NW neutral white 4500K	all on 4 W	CC 350mA @12 V-DC	25° medium-spot	UW, 8x0,5 qmm
4.0050.30.80	1 Multichip POW-LED	250-290 lm	3000K-6000K dynamic white	all on 4 W	CC 350mA @12 V-DC	25° medium-spot	UW, 8x0,5 qmm

SURFACE SPOTLIGHT 4.0050

IP68 | UNDERWATER | EXTERIOR

< Project
Bormes, France

NOTE

SOLE SALINE

SALINE version possible - Article number with additional „S" at the end

OPTIONS

Possible beam angle POW-LED

15° 25° 45° 120°

POW-LED monochrome, single colour in green, red, amber, blue, 2700K

Power supplies Technical details see from page 234.

5.0635.65.10	Constant Current power supply, max 1 spotlights	5.0635.65.20	Constant Current power supply, max 3 spotlights
5.0635.65.10		5.0635.65.20	
5.0635.65.10		5.0635.65.20	
5.0635.19.52	RGB-W-Controller, 12 V-DC-Norm: max 3 spotlights SELV-Norm: max 12 spotlights		
5.0635.19.52			
5.0635.19.52			
5.0635.19.52			

SURFACE SPOTLIGHT 4.0100

UNDERWATER | EXTERIOR IP68

- Powerful, compact spotlight for variable use
- Up to 2300 lumen light intensity
- Perfect for fountains and water attractions

4.0100 | SURFACE-MOUNTED SPOTLIGHT

FOR ILLUMINATING MEDIUM OR LARGE FOUNTAINS, WATER FEATURES, BUILDINGS AND EXTERIOR AREAS.

IP68 | STAINLESS STEEL V4A 1.4571 316Ti | ELECTRO POLISHED | POW-LED INCL. | 3.000 K 4.500 K 6.000 K | RGB-W | DYNAMIC WHITE | DALI 1-10 V OPTIONAL DIMM | CONSTANT CURRENT KONSTANT STROM | CABLE INCL. | max 3m | 90°

NEW SERIES

CENTUM°°

LIGHT UNDERWATER. REDEFINED.

INFO ON PAGE 6

NEW

- Protection class IP68 – up to 3m water depth
- Entirely made of stainless steel 316Ti 1.4571
- Mounting foot adjustable through 90°

...

- POW-LED cold white, warm white, neutral white
- Multichip POW-LED RGB-W
- Multichip POW-LED dynamic white
- operating mode: constant current
- temperature controlled (onboard)
- surge protection
- Rotationally symmetric light distribution

...

- Cable pressure sleeve, stainless steel 316Ti
- Constant-current power source/RGB controller external
- Supplied with lamp and 3 m of underwater cable

12 V-DC-NORMGERECHT BETRIEB ZULÄSSIG UNTER WASSER
CONFORMING 12 V-DC STANDARD OPERATING UNDERWATER
ZUGELASSEN UNTER WASSER
12 V-DC
APPROVED UNDER WATER

ADDITIONAL PARTS

TIPP

Anti-glare ring
1/2-Version, Stainless steel 316Ti, ø 108 mm, length 130 mm
9.0100.00.70

Anti-glare ring
1/1-Version, Stainless steel 316Ti,
ø 108 mm, length 100 mm
9.0100.10.70

glass disc, frosted
for softer light distribution (light loss approx. -15%)
50.40100.0003

230 V

Surface housing IP67
Stainless steel 316Ti,
for 230 V-connection
9.0100.21.10

anti-glare louver
black, for POW-LED
35.40100.0001

Extension arm
Stainless steel 316Ti, length 750 mm
9.0100.21.20

spike
stainless steel, 305 mm
9.0100.20.00

PRODUCT LINE

4.0102
Recessed spotlights
(underwater)
> Page 30

< Project
Roundabout, Karlstad, Sweden
Malux, Sweden

SURFACE SPOTLIGHT 4.0100

UNDERWATER | EXTERIOR | IP68

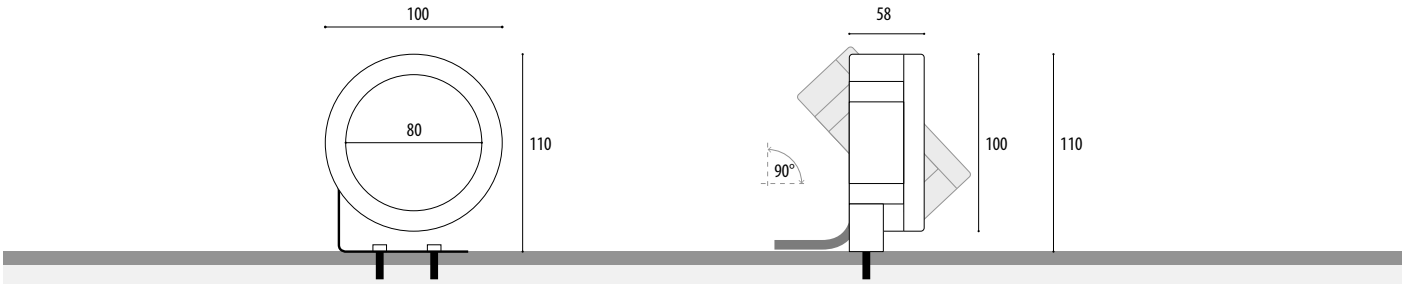

Article number	Lamps	Lumen	Light colour	Wattage	Current	Radation angle	Cable, installs
VERSIONS: UNDER- AND OVERWATER OPERATION (ACCORDING TO PRIOR AGREEMENT)							
4.0100.00.11	4 POW-LED	750 lm	6000K cold white	total 4,4 W	CC 350mA @12 V-DC	30° medium	UW, 2x1,5 qmm
4.0100.00.12	4 POW-LED	650 lm	3000K warm white	total 4,4 W	CC 350mA @12 V-DC	30° medium	UW, 2x1,5 qmm
4.0100.00.13	4 POW-LED	700 lm	4500K neutral white	total 4,4 W	CC 350mA @12 V-DC	30° medium	UW, 2x1,5 qmm
4.0100.00.41	4 Multichip POW-LED	cold white: 350 lm	RGB-CW cold white 6000K	all on 10 W	CC 200mA @12 V-DC	30° medium	UW, 8x0,5 qmm
4.0100.00.42	4 Multichip POW-LED	warm white: 300 lm	RGB-WW warm white 3000K	all on 10 W	CC 200mA @12 V-DC	30° medium	UW, 8x0,5 qmm
4.0100.00.43	4 Multichip POW-LED	neutral white: 330 lm	RGB-NW neutral white 4500K	all on 10 W	CC 200mA @12 V-DC	30° medium	UW, 8x0,5 qmm
VERSIONS: ONLY UNDERWATER OPERATION							
4.0100.30.11	4 POW-LED	2300 lm	6000K cold white	total 18 W	CC 1200mA @12 V-DC	30° medium	UW, 2x1,5 qmm
4.0100.30.12	4 POW-LED	1880 lm	3000K warm white	total 18 W	CC 1200mA @12 V-DC	30° medium	UW, 2x1,5 qmm
4.0100.30.13	4 POW-LED	2010 lm	4500K neutral white	total 18 W	CC 1200mA @12 V-DC	30° medium	UW, 2x1,5 qmm
4.0100.30.41	4 Multichip POW-LED	cold white: 580 lm	RGB-CW cold white 6000K	all on 17 W	CC 350mA @12 V-DC	30° medium	UW, 8x0,5 qmm
4.0100.30.42	4 Multichip POW-LED	warm white: 500 lm	RGB-WW warm white 3000K	all on 17 W	CC 350mA @12 V-DC	30° medium	UW, 8x0,5 qmm
4.0100.30.43	4 Multichip POW-LED	neutral white: 540 lm	RGB-NW neutral white 4500K	all on 17 W	CC 350mA @12 V-DC	30° medium	UW, 8x0,5 qmm
4.0100.30.80	4 Multichip POW-LED	1000-1160 lm	3000K-6000K dynamic white	all on 17 W	CC 350mA @12 V-DC	30° medium	UW, 8x0,5 qmm

SURFACE SPOTLIGHT 4.0100

IP68 | UNDERWATER | EXTERIOR

< Project
Hotel Das König Ludwig Wellness & SPA Resort Allgäu, Schwangau, Germany

Power supplies Technical details see from page 234.

5.0635.65.10	Constant Current power supply, max 1 spotlights	5.0635.65.20	Constant Current power supply, max 3 spotlights
5.0635.65.10		5.0635.65.20	
5.0635.65.10		5.0635.65.20	
5.0620.19.52	RGB-W-Controller, 12 V-DC-Norm: max 1 spotlights SELV-Norm: max 3 spotlights		
5.0620.19.52			
5.0620.19.52			

5.0630.10.04	Constant Current power supply, max 1 spotlights	5.0630.00.04	Constant Current power supply, without mounting housing max 1 spotlights
5.0630.10.04		5.0630.00.04	
5.0630.10.04		5.0630.00.04	
5.0635.19.52	RGB-W-Controller, 12 V-DC-Norm: max 1 spotlights SELV-Norm: max 3 spotlights		
5.0635.19.52			
5.0635.19.52			
5.0635.19.52			

NOTE

SOLE SALINE

SALINE version possible - Article number with additional „S" at the end

OPTIONS

Possible beam angle POW-LED

15° 30° 45° 120° 15x50°

POW-LED monochrome, single colour in green, red, amber, blue, 2700K

RECESSED SPOTLIGHTS

UNDERWATER

PAGES 48-115

RECESSED SPOTLIGHT 4.0199

UNDERWATER | IP68

- Versatile spotlight with award-winning technology
- Up to 3450 lumen light intensity
- Ideal for private pools, hotel pools and adventure pools

4.0199 | SWIMMINGPOOL-LIGHT

FOR ILLUMINATING MEDIUM-SIZED SWIMMING POOLS.

CENTUM°° Updated version available: 4.0202 – Page 26

IP68 | STAINLESS STEEL V4A 1.4571 316Ti | POW-LED INCL. | 3.000 K 4.500 K 6.000 K BLUE | RGB RGB-W | CONSTANT CURRENT CONSTANT VOLTAGE | DALI 1-10 V OPTIONAL DIMM | CABLE INCL. | max 5m | CE | III

· Protection class IP68 – up to 5m water depth
· Entirely made of stainless steel 316Ti 1.4571
· Round attachment cover, made of stainless steel 316Ti, height 3 mm
...
· POW-LED cold white, warm white, neutral white
· POW-LED royal blue
· Multichip POW-LED RGB
· operating mode: constant current

· Multichip POW-LED RGB-W
· operating mode: constant voltage

· Halogene QR-CB51 ES 12 V-AC
· Rotationally symmetric light distribution
...
· Constant-current power source/RGB controller/transformer ordered separately
· Installation housing made of stainless steel 316Ti with 1.5 m cable protection tube
· Supplied with 3 m of special underwater cable

ADDITIONAL PARTS

glass disc, frosted
for softer light distribution (light loss approx. -15%)
50.4.00109.138

mounting plate
for adaptation to 4.0199 series with already installed housing, made of stainless steel 316Ti, round, ø 300 mm
9.0199.20.00

PRODUCT LINE

4.0299 – Retrofit
Recessed spotlights (underwater)
> Page 54

4.0299.73 – Retrofit Saline
Recessed spotlights (underwater)
> Page 58

4.0299.75 – Flush
Recessed spotlights (underwater)
> Page 62

< Project
Burswood Entertainment Complex, Intercontinental Hotel, Perth, Australia;
Client: TLS Productions, Perth, Lighting design: Luke Ellis, BCA Consultants Pty Ltd, Perth

RECESSED SPOTLIGHT 4.0199

UNDERWATER IP68

Installation housing

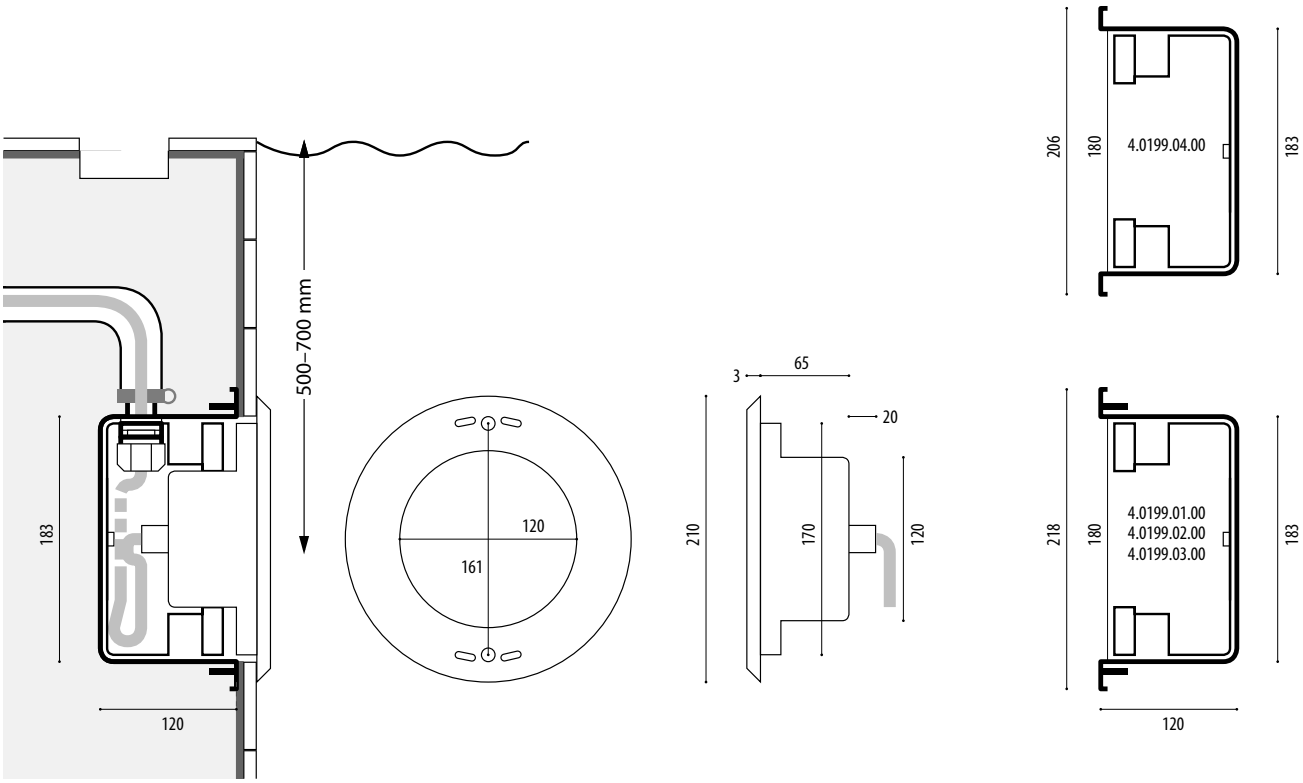

Article number	Lamps	Lumen	Light colour	Wattage	Current/Voltage	Radation angle	UW-Cable, installs	[V]
ONLY UNDERWATER OPERATION								
POW-LED MONOCHROME								
4.0199.00.11	15 POW-LED	3450 lm	6000K cold white	total 42 W	CC 3500mA @12 V-DC	120° flood	UW, 2x2,5 qmm	W23
4.0199.00.12	15 POW-LED	2850 lm	3000K warm white	total 42 W	CC 3500mA @12 V-DC	120° flood	UW, 2x2,5 qmm	
4.0199.00.13	15 POW-LED	3225 lm	4500K neutral white	total 42 W	CC 3500mA @12 V-DC	120° flood	UW, 2x2,5 qmm	
4.0199.00.16	15 POW-LED	650 mW/LED	royal blue	total 42 W	CC 3500mA @12 V-DC	120° flood	UW, 2x2,5 qmm	
POW-LED RGB								
4.0199.00.19	9 Multichip POW-LED		RGB	all on 85 W	CC 700mA @12 V-DC	120° flood	UW, 6x1,0 + 2x0,5 qmm	X09
POW-LED RGB-W - DIFFUS - SCATTER DISC								
4.0199.00.41	6 Multichip POW-LED	coldwhite: 1590 lm	RGB-CW cold white 6000K	all on 60 W	CV 12 V-DC	diffus	UW, 2x2,5 + 4x0,5 qmm	
4.0199.00.42	6 Multichip POW-LED	warmwhite: 1220 lm	RGB-WW warm white 3000K	all on 60 W	CV 12 V-DC	diffus	UW, 2x2,5 + 4x0,5 qmm	
4.0199.00.43	6 Multichip POW-LED	neutralwhite: 1390 lm	RGB-NW neutral white 4500K	all on 60 W	CV 12 V-DC	diffus	UW, 2x2,5 + 4x0,5 qmm	
4.0199.00.44	6 Multichip POW-LED		RGB amber	all on 60 W	CV 12 V-DC	diffus	UW, 2x2,5 + 4x0,5 qmm	
POW-LED RGB-W - 25° MIXING LENSES								
4.0199.01.41	6 Multichip POW-LED	coldwhite: 1590 lm	RGB-CW cold white 6000K	all on 60 W	CV 12 V-DC	25° medium spot	UW, 2x2,5 + 4x0,5 qmm	
4.0199.01.42	6 Multichip POW-LED	warmwhite: 1220 lm	RGB-WW warm white 3000K	all on 60 W	CV 12 V-DC	25° medium spot	UW, 2x2,5 + 4x0,5 qmm	
4.0199.01.43	6 Multichip POW-LED	neutralwhite: 1390 lm	RGB-NW neutral white 4500K	all on 60 W	CV 12 V-DC	25° medium spot	UW, 2x2,5 + 4x0,5 qmm	
4.0199.01.44	6 Multichip POW-LED		RGB amber	all on 60 W	CV 12 V-DC	25° medium spot	UW, 2x2,5 + 4x0,5 qmm	
HALOGENE								
4.0199.00.15	3 x QR-CBC51 ES 50 W	8.600cd	3000K	150W	12V-AC	36°	UW, 2x2,5 qmm	C85

INSTALLATION HOUSING

4.0199.01.00	made of V4A stainless steel with 1.5 m protective cable tube and M20 plastic terminating connection, for installation in concrete pools with tile covering
4.0199.02.00	made of V4A stainless steel with 1.5m protective cable tube and M20 plastic terminating connection, for installation in thin-walled pools and foil lined pools (pressure flange ø 218 mm)
4.0199.03.00	made of V4A stainless steel with 1.5 m protective cable tube and M20 plastic terminating connection, for installation in pools with adhesive/foil coating (adhesive flange ø 360 mm)
4.0199.04.00	made of V4A stainless steel with 1.5 m protective cable tube and M20 plastic terminating connection, for facing concrete and for welding into stainless steel pools

RECESSED SPOTLIGHT 4.0199

IP68 | UNDERWATER

pressure flange
for thin-walled pools or pools with fitted plastic foil

gluing and pressure flange
for adhesive/foil coating with pressure flange

gluing flange
for adhesive/foil coating

< Project
Europabad, Karlsruhe, Germany

Power supplies	Technical details see from page 234.
5.0670.00.15	
5.0670.00.15	Constant Current power supply, max 1 spotlights
5.0670.00.15	
5.0670.00.15	
5.0670.19.24	RGB-Controller, max 1 spotlights
5.0670.09.52	
5.0670.09.52	RGB-W-Controller, max 2 spotlights
5.0670.09.52	
5.0670.09.52	
5.0670.09.52	
5.0670.09.52	RGB-W-Controller, max 2 spotlights
5.0670.09.52	
5.0670.09.52	
5.0101.00.00	Transformer, max 1 spotlights

NOTE

Matching installation housing should be selected, depending on the installation type and situation.

For facing concrete please use housing 4.0199.04.00

SOLE SALINE

SALINE version possible - Spotlight 4.0299.73

OPTIONS

Possible beam angle POW-LED

10° 30° 45°

Possible beam angle HALOGENE

10° 24° 36° 60°

POW-LED monochrome, single colour in green, red, amber, turquoise, capriblue

RGB-W

Version without Scatter disc at RGB-W

RECESSED SPOTLIGHT 4.0299

UNDERWATER | IP68

- Equivalent replacement for halogen (175 W)
- Up to 3450 lumen light intensity
- Easy installation

4.0299 | RETROFIT-SPOTLIGHT

FOR RETROFITTING IN EXISTING SWIMMING POOLS WITH EXISTING WIBRE INSTALLATION HOUSING. AS RETROFIT FOR MANY OTHER BRANDS.

IP68 | STAINLESS STEEL V4A 1.4571 316Ti | POW-LED INCL. | 3.000 K 4.500 K 6.000 K BLUE | RGB RGB-W | 12 V-DC | DALI 1-10 V OPTIONAL DIMM | CABLE INCL. | max 5m | CE | III

· Protection class IP68 – up to 5m water depth
· Entirely made of stainless steel 316Ti 1.4571
· Round attachment cover, made of stainless steel 316Ti, height 13 mm
...
· operating mode: constant current
  · POW-LED cold white, warm white, neutral white
  · POW-LED royal blue
  · Multichip POW-LED RGB
· operating mode: constant voltage
  · Multichip POW-LED RGB-W
· Rotationally symmetric light distribution
...
· Constant-current power source/RGB controller ordered separately
· Supplied with 3 m of special underwater cable

ADDITIONAL PARTS

TIPP

mounting bracket
required for Replacement
9.0299.00.10

mounting plate
made of V4A-stainless steel, round, ø 310 mm
9.0299.20.00

mounting plate
made of V4A-stainless steel, square, 290 x 290 mm
9.0299.40.00

glass disc, frosted
for softer light distribution (light loss approx. -15%)
50.4.00109.138

PRODUCT LINE

4.0199 – Standard
Recessed spotlights
(underwater)
> Page 50

4.0299.73 – Retrofit Saline
Recessed spotlights
(underwater)
> Page 58

4.0299.75 – Flush
Recessed spotlights
(underwater)
> Page 62

< Project
Airporthotel Basel Mulhouse, France
Partner: MW MarvalWay; Artinox

RECESSED SPOTLIGHT 4.0299

UNDERWATER

IP68

Installation housing

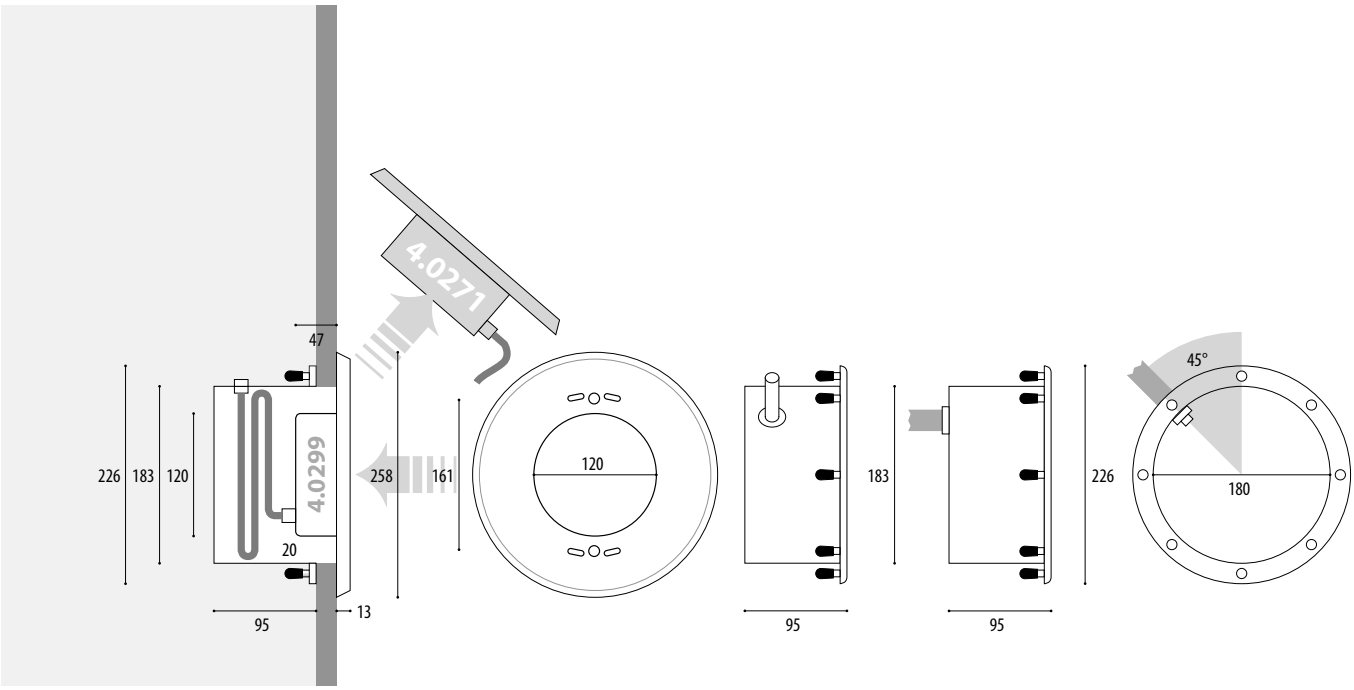

Article number	Lamps	Lumen	Light colour	Wattage	Current/Voltage	Radation angle	UW-Cable, installs	[V]
ONLY UNDERWATER OPERATION								
4.0299.00.11	15 POW-LED	3450 lm	6000K cold white	total 42 W	CC 3500mA @12 V-DC	120° flood	UW, 2x2,5 qmm	W23
4.0299.00.12	15 POW-LED	2850 lm	3000K warm white	total 42 W	CC 3500mA @12 V-DC	120° flood	UW, 2x2,5 qmm	
4.0299.00.13	15 POW-LED	3225 lm	4500K neutral white	total 42 W	CC 3500mA @12 V-DC	120° flood	UW, 2x2,5 qmm	
4.0299.00.16	15 POW-LED	650 mW/LED	royal blue	total 42 W	CC 3500mA @12 V-DC	120° flood	UW, 2x2,5 qmm	
4.0299.00.19	9 Multichip POW-LED		RGB	all on 85 W	CC 700mA @12 V-DC	120° flood	UW, 6x1,0 + 2x0,5 qmm	X09
4.0299.00.41	6 Multichip POW-LED	coldwhite: 1590 lm	RGB-CW cold white 6000K	all on 60 W	CV 12 V-DC	diffus	UW, 2x2,5 + 4x0,5 qmm	
4.0299.00.42	6 Multichip POW-LED	warmwhite: 1220 lm	RGB-WW warm white 3000K	all on 60 W	CV 12 V-DC	diffus	UW, 2x2,5 + 4x0,5 qmm	
4.0299.00.43	6 Multichip POW-LED	neutralwhite: 1390 lm	RGB-NW neutral white 4500K	all on 60 W	CV 12 V-DC	diffus	UW, 2x2,5 + 4x0,5 qmm	
4.0299.00.44	6 Multichip POW-LED		RGB amber	all on 60 W	CV 12 V-DC	diffus	UW, 2x2,5 + 4x0,5 qmm	

INSTALLATION HOUSING

4.0299.00.00	built in pot of 316L stainless steel with 1,5 m cable duct, cable entry from side
4.0299.50.00	built in pot of 316L stainless steel with 1,5 m cable duct, cable entry from behind

RECESSED SPOTLIGHT 4.0299

IP68 | UNDERWATER

FOR NEW INSTALLATION

built in pot of 316L stainless steel with 1,5 m cable duct, cable entry from side

4.0299.00.00

built in pot of 316L stainless steel with 1,5 m cable duct, cable entry from behind

4.0299.50.00

pressure flange
for thin-walled pools or pools with fitted plastic foil
4.0299.00.25

gluing and pressure flange
for adhesive/foil coating with pressure flange
4.0299.55.25

gluing flange
for adhesive/foil coating
4.0274.55.55

NOTE

A new mounting bracket is required (9.0299.00.10)

Power supplies — Technical details see from page 234.

5.0670.00.15	Constant Current power supply, max 1 spotlights
5.0670.00.15	
5.0670.00.15	
5.0670.00.15	
5.0670.19.24	RGB-Controller, max 1 spotlights
5.0670.09.52	RGB-W-Controller, max 2 spotlights
5.0670.09.52	
5.0670.09.52	
5.0670.09.52	

OPTIONS

Possible beam angle POW-LED

10° | 30° | 45°

POW-LED monochrome, single colour in green, red, amber, turquoise, capriblue

RGB-W — Version without Scatter disc at RGB-W

Version for the replacement of existing PAR56 lights. All common manufacturers available (cover with different hole pitch circles).

RECESSED SPOTLIGHT
4.0299.73

UNDERWATER | IP68

- Equivalent replacement for halogen (175 W)
- Up to 3450 lumen light intensity
- For baths with increased brine concentration

4.0299.73 | RETROFIT-SPOTLIGHT

SALINE VERSION. FOR RETROFITTING IN EXISTING SWIMMING POOLS WITH EXISTING WIBRE INSTALLATION HOUSING. AS RETROFIT FOR MANY OTHER BRANDS.

IP68 | STAINLESS STEEL V4A 1.4539 904L | POW-LED INCL. | 3.000 K 4.500 K 6.000 K BLUE | RGB RGB-W | CONSTANT CURRENT CONSTANT VOLTAGE | DALI 1-10 V OPTIONAL DIMM | CABLE INCL. | max 5m | CE | III

· Protection class IP68 – up to 5m water depth
· special corrosion-proof version made marine grade 904L stainless steel 1.4539
· for pools with increased saltwater concentration (up to 3.5 %)
· Round attachment cover, made of stainless steel 904L, height 13 mm
...
· operating mode: constant current
  · POW-LED cold white, warm white, neutral white
  · POW-LED royal blue
  · Multichip POW-LED RGB
· operating mode: constant voltage
  · Multichip POW-LED RGB-W
· Rotationally symmetric light distribution
...
· Constant-current power source/RGB controller ordered separately
· Supplied with 3 m of special underwater cable

ADDITIONAL PARTS

TIPP

mounting bracket
required for Replacement, saline version
9.0299.73.10

mounting plate
Saline version, made of V4A-stainless steel 1.4539, round, ø 310 mm
9.0299.20.73

mounting plate
Saline version, made of stainless steel 904L 1.4539, square, 290 x 290 mm
9.0299.40.73

glass disc, frosted
for softer light distribution (light loss approx. -15%)
50.4.00109.138

PRODUCT LINE

4.0199 – Standard
Recessed spotlights
(underwater)
> Page 50

4.0299 – Retrofit
Recessed spotlights
(underwater)
> Page 54

4.0299.75 – Flush
Recessed spotlights
(underwater)
> Page 62

< Project
Conrad Maldives Rangali Island, Maldives
Planner: Bo Steiber Lighting Design

RECESSED SPOTLIGHT
4.0299.73

UNDERWATER | IP68

Installation housing

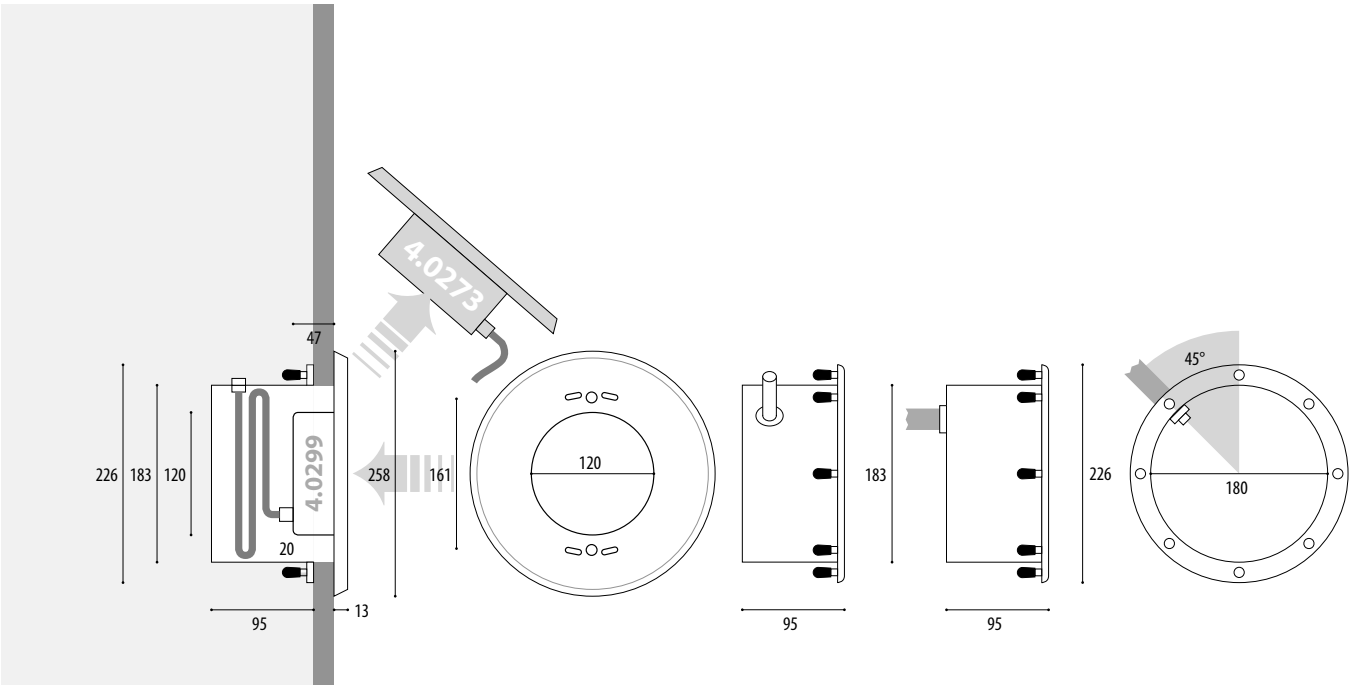

Article number	Lamps	Lumen	Light colour	Wattage	Current/Voltage	Radation angle	UW-Cable, installs	[V]
ONLY UNDERWATER OPERATION								
4.0299.73.11	15 POW-LED	3450 lm	6000K cold white	total 42 W	CC 3500mA @12 V-DC	120° flood	UW, 2x2,5 qmm	W23
4.0299.73.12	15 POW-LED	2850 lm	3000K warm white	total 42 W	CC 3500mA @12 V-DC	120° flood	UW, 2x2,5 qmm	
4.0299.73.13	15 POW-LED	3225 lm	4500K neutral white	total 42 W	CC 3500mA @12 V-DC	120° flood	UW, 2x2,5 qmm	
4.0299.73.16	15 POW-LED	650 mW/LED	royal blue	total 42 W	CC 3500mA @12 V-DC	120° flood	UW, 2x2,5 qmm	
4.0299.73.19	9 Multichip POW-LED		RGB	all on 85 W	CC 700mA @12 V-DC	120° flood	UW, 6x1,0 + 2x0,5 qmm	X09
4.0299.73.41	6 Multichip POW-LED	coldwhite: 1590 lm	RGB-CW cold white 6000K	all on 60 W	CV 12 V-DC	diffus	UW, 2x2,5 + 4x0,5 qmm	
4.0299.73.42	6 Multichip POW-LED	warmwhite: 1220 lm	RGB-WW warm white 3000K	all on 60 W	CV 12 V-DC	diffus	UW, 2x2,5 + 4x0,5 qmm	
4.0299.73.43	6 Multichip POW-LED	neutralwhite: 1390 lm	RGB-NW neutral white 4500K	all on 60 W	CV 12 V-DC	diffus	UW, 2x2,5 + 4x0,5 qmm	
4.0299.73.44	6 Multichip POW-LED		RGB amber	all on 60 W	CV 12 V-DC	diffus	UW, 2x2,5 + 4x0,5 qmm	

INSTALLATION HOUSING

4.0299.73.00	built in pot of 316L stainless steel with 1,5 m cable duct, cable entry from side, saline version

RECESSED SPOTLIGHT
4.0299.73

IP68 | UNDERWATER

< Project
Schlosshotel Fiss, Austria
Photo: Rabensteiner Mario

FOR NEW INSTALLATION

built in pot of 316L stainless steel with 1,5 m cable duct, cable entry from side, saline version

4.0299.73.00

flanges for saline versions on request

NOTE

A new mounting bracket is required (9.0299.73.10)

Power supplies	Technical details see from page 234.
5.0670.00.15	
5.0670.00.15	Constant Current power supply, max 1 spotlights
5.0670.00.15	
5.0670.00.15	
5.0670.19.24	RGB-Controller, max 1 spotlights
5.0670.09.52	
5.0670.09.52	RGB-W-Controller, max 2 spotlights
5.0670.09.52	
5.0670.09.52	

OPTIONS

Possible beam angle POW-LED

POW-LED monochrome, single colour in green, red, amber, turquoise, capriblue

RGB-W

Version without Scatter disc at RGB-W

Version for the replacement of existing PAR56 lights. All common manufacturers available (cover with different hole pitch circles).

RECESSED SPOTLIGHT
4.0299.75

UNDERWATER | IP68

- Equivalent replacement for halogen (175 W)
- Up to 3450 lumen light intensity
- For flush installation

4.0299.75 | RETROFIT-SPOTLIGHT

FOR MOVABLE FLOORS AND FLUSH INSTALLATION. FOR RETROFITTING IN EXISTING SWIMMING POOLS WITH EXISTING WIBRE INSTALLATION HOUSING. AS RETROFIT FOR MANY OTHER BRANDS.

IP68 | STAINLESS STEEL V4A 1.4571 316Ti | POW-LED INCL. | 3.000 K 4.500 K 6.000 K BLUE | RGB RGB-W | CONSTANT CURRENT CONSTANT VOLTAGE | DALI 1-10 V OPTIONAL DIMM | CABLE INCL. | max 5m

· Protection class IP68 – up to 5m water depth
· Entirely made of stainless steel 316Ti 1.4571
· flush cover made of stainless steel 316Ti, height 2 mm
· for pools with movable floors and for flush installation
...
· operating mode: constant current
  · POW-LED cold white, warm white, neutral white
  · POW-LED royal blue
  · Multichip POW-LED RGB
· operating mode: constant voltage
  · Multichip POW-LED RGB-W
· Rotationally symmetric light distribution
...
· Constant-current power source/RGB controller ordered separately
· Supplied with 3 m of special underwater cable

ADDITIONAL PARTS

TIPP

mounting bracket
required for Replacement
9.0299.00.10

TIPP

angular ring
for flush installation, ø 245 x 14 mm
4.1367.00.00

glass disc, frosted
for softer light distribution (light loss approx. -15%)
50.4.00109.138

PRODUCT LINE

4.0199 – Standard
Recessed spotlights
(underwater)
> Page 50

4.0299 – Retrofit
Recessed spotlights
(underwater)
> Page 54

4.0299.73 – Retrofit Saline
Recessed spotlights
(underwater)
> Page 58

< Project
Roland Matthes Swimming Hall, Erfurt, Germany
© Wolfgang Fallier

RECESSED SPOTLIGHT 4.0299.75

UNDERWATER

IP68

Installation housing

Installation housing

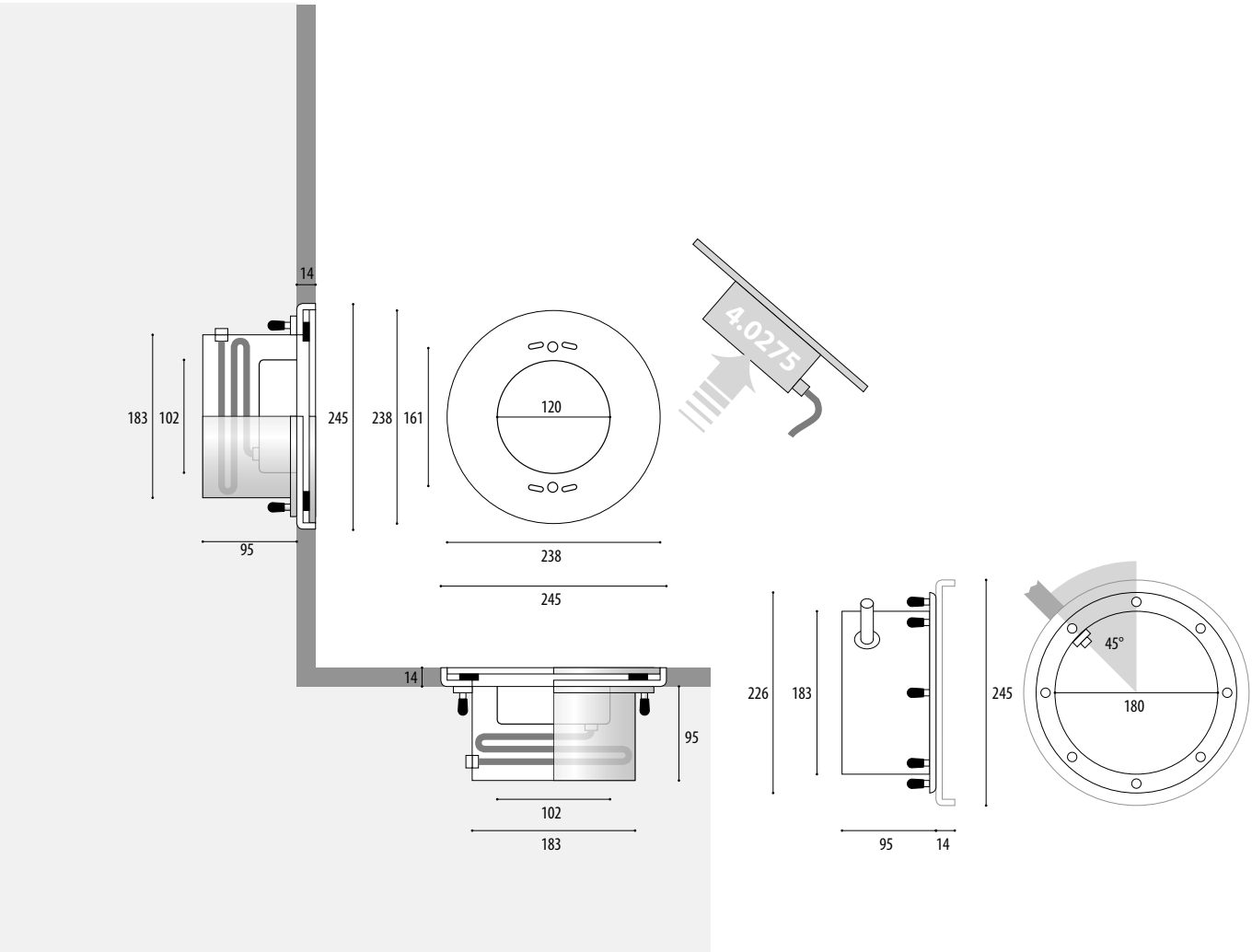

Article number	Lamps	Lumen	Light colour	Wattage	Current/Voltage	Radation angle	UW-Cable, installs	[V]
ONLY UNDERWATER OPERATION								
4.0299.75.11	15 POW-LED	3450 lm	6000K cold white	total 42 W	CC 3500mA @12 V-DC	120° flood	UW, 2x2,5 qmm	W23
4.0299.75.12	15 POW-LED	2850 lm	3000K warm white	total 42 W	CC 3500mA @12 V-DC	120° flood	UW, 2x2,5 qmm	
4.0299.75.13	15 POW-LED	3225 lm	4500K neutral white	total 42 W	CC 3500mA @12 V-DC	120° flood	UW, 2x2,5 qmm	
4.0299.75.16	15 POW-LED	650 mW/LED	royal blue	total 42 W	CC 3500mA @12 V-DC	120° flood	UW, 2x2,5 qmm	
4.0299.75.19	9 Multichip POW-LED		RGB	all on 85 W	CC 700mA @12 V-DC	120° flood	UW, 6x1,0 + 2x0,5 qmm	X09
4.0299.75.41	6 Multichip POW-LED	coldwhite: 1590 lm	RGB-CW cold white 6000K	all on 60 W	CV 12 V-DC	diffus	UW, 2x2,5 + 4x0,5 qmm	
4.0299.75.42	6 Multichip POW-LED	warmwhite: 1220 lm	RGB-WW warm white 3000K	all on 60 W	CV 12 V-DC	diffus	UW, 2x2,5 + 4x0,5 qmm	
4.0299.75.43	6 Multichip POW-LED	neutralwhite: 1390 lm	RGB-NW neutral white 4500K	all on 60 W	CV 12 V-DC	diffus	UW, 2x2,5 + 4x0,5 qmm	
4.0299.75.44	6 Multichip POW-LED		RGB amber	all on 60 W	CV 12 V-DC	diffus	UW, 2x2,5 + 4x0,5 qmm	

INSTALLATION HOUSING

4.0299.00.00	built in pot of 316L stainless steel with 1,5 m cable duct, cable entry from side
4.0299.50.00	built in pot of 316L stainless steel with 1,5 m cable duct, cable entry from behind

RECESSED SPOTLIGHT
4.0299.75

IP68 | UNDERWATER

< Project
The Surdiman Villa, Medan, Indonesia
Planner: Sinar Teknik

FOR NEW INSTALLATION

built in pot of 316L stainless steel with 1,5 m cable duct, cable entry from side

4.0299.00.00

built in pot of 316L stainless steel with 1,5 m cable duct, cable entry from behind

4.0299.50.00

Power supplies — Technical details see from page 234.

5.0670.00.15	Constant Current power supply, max 1 spotlights
5.0670.00.15	
5.0670.00.15	
5.0670.00.15	
5.0670.19.24	RGB-Controller, max 1 spotlights
5.0670.09.52	RGB-W-Controller, max 2 spotlights
5.0670.09.52	
5.0670.09.52	
5.0670.09.52	

NOTE

for flush installation only with angular ring 4.1367.00.00

A new mounting bracket is required (9.0299.00.10)

OPTIONS

Possible beam angle POW-LED

10° 30° 45°

POW-LED monochrome, single colour in green, red, amber, turquoise, capriblue

RGB-W

Version without Scatter disc at RGB-W

RECESSED SPOTLIGHT
4.0291.57

UNDERWATER | IP68

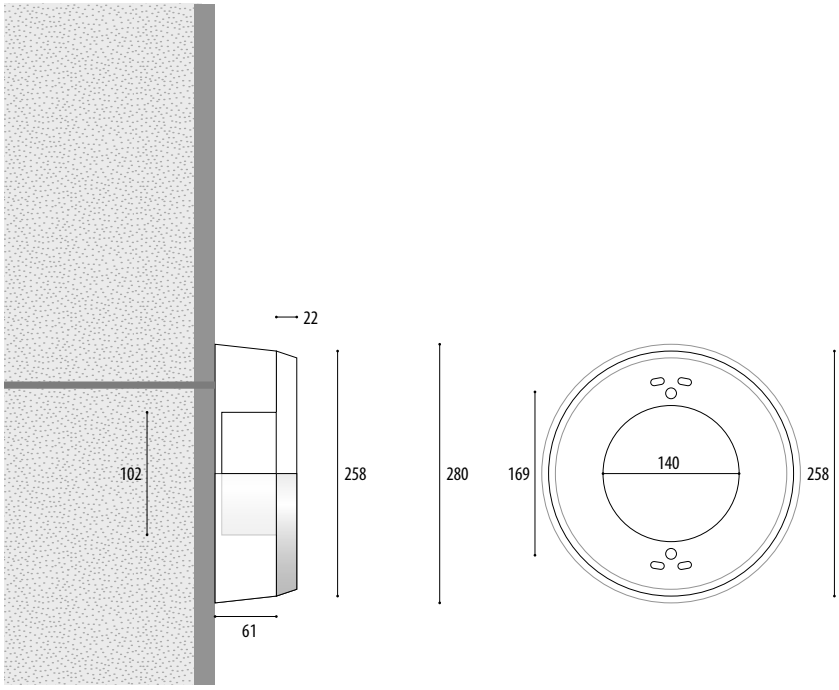

Article number	Lamps	Lumen	Light colour	Wattage	Current	Radation angle
ONLY UNDERWATER OPERATION						
4.0291.57.11	12 POW-LED	6900 lm	6000K cold white	total 47 W	CC 3600mA @12 V-DC	asymmetrisch Mixflux
4.0291.57.12	12 POW-LED	5640 lm	3000K warm white	total 47 W	CC 3600mA @12 V-DC	asymmetrisch Mixflux
4.0291.57.13	12 POW-LED	6036 lm	4500K neutral white	total 47 W	CC 3600mA @12 V-DC	asymmetrisch Mixflux
4.0291.57.16	48 POW-LED		500mW/LED royal blue 450 nm	total 49,5 W	CC 3600mA @12 V-DC	asymmetrisch Mixflux
4.0291.57.41	12 Multichip POW-LED	cold white: 2100 lm	RGB-CW cold white 6000K	all on 75 W	CC 1400mA @12 V-DC	asymmetrisch Mixflux

4.0291.57 | SWIMMINGPOOL-LIGHT

FOR RETROFIT INSTALLATION ON THE POOL WALL. FOR ILLUMINATING MEDIUM AND LARGE SWIMMING POOLS.

IP68 | STAINLESS STEEL V4A 1.4571 316Ti | POW-LED INCL. | 3.000 K 4.500 K 6.000 K BLUE | RGB-W | CONSTANT CURRENT KONSTANT STROM | DALI 1-10 V OPTIONAL DIMM | CABLE INCL. | max 5m

- Protection class IP68 – up to 5m water depth
- Entirely made of stainless steel 316Ti 1.4571, epolished
- Round attachment cover, made of stainless steel 316Ti, height 2 mm
- with a moulded plastic component for retrofit installation on the pool wall

...

- POW-LED cold white, warm white, neutral white
- POW-LED royal blue
- Multichip POW-LED RGB-W
- operating mode: constant current
- temperature controlled (onboard)
- surge protection
- light distribution especially for swimming pool lighting "asymmetric Mixflux"

...

- Constant-current power source/RGB-W-controller ordered separately
- Installation housing made of stainless steel 316Ti with 1.5 m cable protection tube
- Supplied with 10 m of special underwater cable

PRODUCT LINE

4.0291.58
Recessed spotlights (underwater)
> Page 32

ADDITIONAL PARTS

DMX DONGLE

DMX-Dongle
load resistance 120 Ohm
5.0670.09.65

TIPP

IP65 + –

mounting housing
plastic, IP65, with 2 in/1 out,
transparent cover,
suitable for power supply 5.0630.01.12
and RGB-W Controller 5.0630.09.52
9.0630.65.12

OPTIONS

Possible beam angle POW-LED

15° | 30° | 45° | 120° | 15x50°

POW-LED monochrome, single colour in green, red, amber, blue, capri blue

CUSTOM MADE

Individual configuration of the LED multichips possible

Power supplies Technical details see from page 234.

5.0630.01.12	Constant Current power supply, dimmable, max 1 spotlights	5.0630.03.12	Constant Current power supply, dimmable, max 3 spotlights	5.0630.10.12	Constant Current power supply, IP65, not dimmable, max 1 spotlights
5.0630.01.12		5.0630.03.12		5.0630.10.12	
5.0630.01.12		5.0630.03.12		5.0630.10.12	
5.0630.01.12		5.0630.03.12		5.0630.10.12	
5.0630.09.52	RGB-W-Controller, max 1 spotlights				

RECESSED SPOTLIGHT
4.0291.58

UNDERWATER | IP68

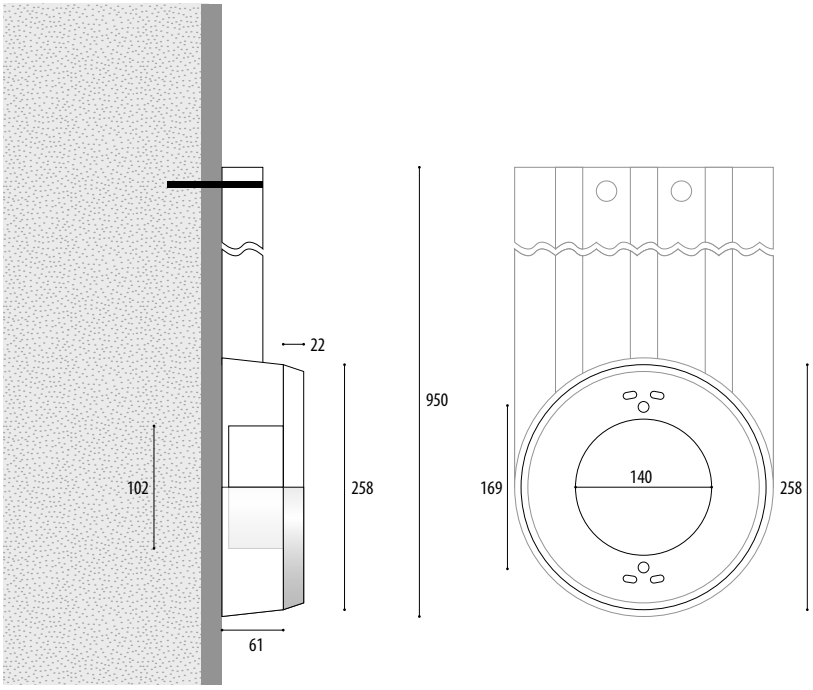

Article number	Lamps	Lumen	Light colour	Wattage	Current	Radation angle
ONLY UNDERWATER OPERATION						
4.0291.58.11	12 POW-LED	6900 lm	6000K cold white	total 47 W	CC 3600mA @12 V-DC	asymmetrisch Mixflux
4.0291.58.12	12 POW-LED	5640 lm	3000K warm white	total 47 W	CC 3600mA @12 V-DC	asymmetrisch Mixflux
4.0291.58.13	12 POW-LED	6036 lm	4500K neutral white	total 47 W	CC 3600mA @12 V-DC	asymmetrisch Mixflux
4.0291.58.16	48 POW-LED		500mW/LED royal blue 450 nm	total 49,5 W	CC 3600mA @12 V-DC	asymmetrisch Mixflux
4.0291.58.41	12 Multichip POW-LED	cold white: 2100 lm	RGB-CW cold white 6000K	all on 75 W	CC 1400mA @12 V-DC	asymmetrisch Mixflux

4.0291.58 | SWIMMINGPOOL-LIGHT

FOR RETROFIT INSTALLATION ON THE POOL WALL. FOR ILLUMINATING MEDIUM AND LARGE SWIMMING POOLS.

IP68 | STAINLESS STEEL V4A 1.4571 316Ti | POW-LED INCL. | 3.000 K 4.500 K 6.000 K BLUE | RGB-W | CONSTANT CURRENT KONSTANT STROM | DALI 1-10 V OPTIONAL DIMM | CABLE INCL. | max 5m

· Protection class IP68 – up to 5m water depth
· Entirely made of stainless steel 316Ti 1.4571, epolished
· Round attachment cover, made of stainless steel 316Ti, height 2 mm
· with a moulded plastic component for retrofit installation or flexible use on the edge of the pool
...
· POW-LED cold white, warm white, neutral white
· POW-LED royal blue
· Multichip POW-LED RGB-W
· operating mode: constant current
· temperature controlled (onboard)
· surge protection
· light distribution especially for swimming pool lighting "asymmetric Mixflux"
...
· Constant-current power source/RGB-W-controller ordered separately
· Installation housing made of stainless steel 316Ti with 1.5 m cable protection tube
· Supplied with 10 m of special underwater cable

PRODUCT LINE

4.0291.57
Recessed spotlights (underwater)
> Page 32

ADDITIONAL PARTS

DMX DONGLE

DMX-Dongle
load resistance 120 Ohm
5.0670.09.65

TIPP
IP65 + –

mounting housing
plastic, IP65, with 2 in/1 out,
transparent cover,
suitable for power supply 5.0630.01.12
and RGB-W Controller 5.0630.09.52
9.0630.65.12

OPTIONS

Possible beam angle POW-LED

15° | 30° | 45° | 120° | 15x50°

POW-LED monochrome, single colour in green, red, amber, blue, capri blue

CUSTOM MADE

Individual configuration of the LED multichips possible

Power supplies Technical details see from page 234.

5.0630.01.12	Constant Current power supply, dimmable, max 1 spotlights	5.0630.03.12	Constant Current power supply, dimmable, max 3 spotlights	5.0630.10.12	Constant Current power supply, IP65, not dimmable, max 1 spotlights
5.0630.01.12		5.0630.03.12		5.0630.10.12	
5.0630.01.12		5.0630.03.12		5.0630.10.12	
5.0630.01.12		5.0630.03.12		5.0630.10.12	
5.0630.09.52	RGB-W-Controller, max 1 spotlights				

RECESSED SPOTLIGHT 4.0271

UNDERWATER IP68

Frosted glass

Installation housing

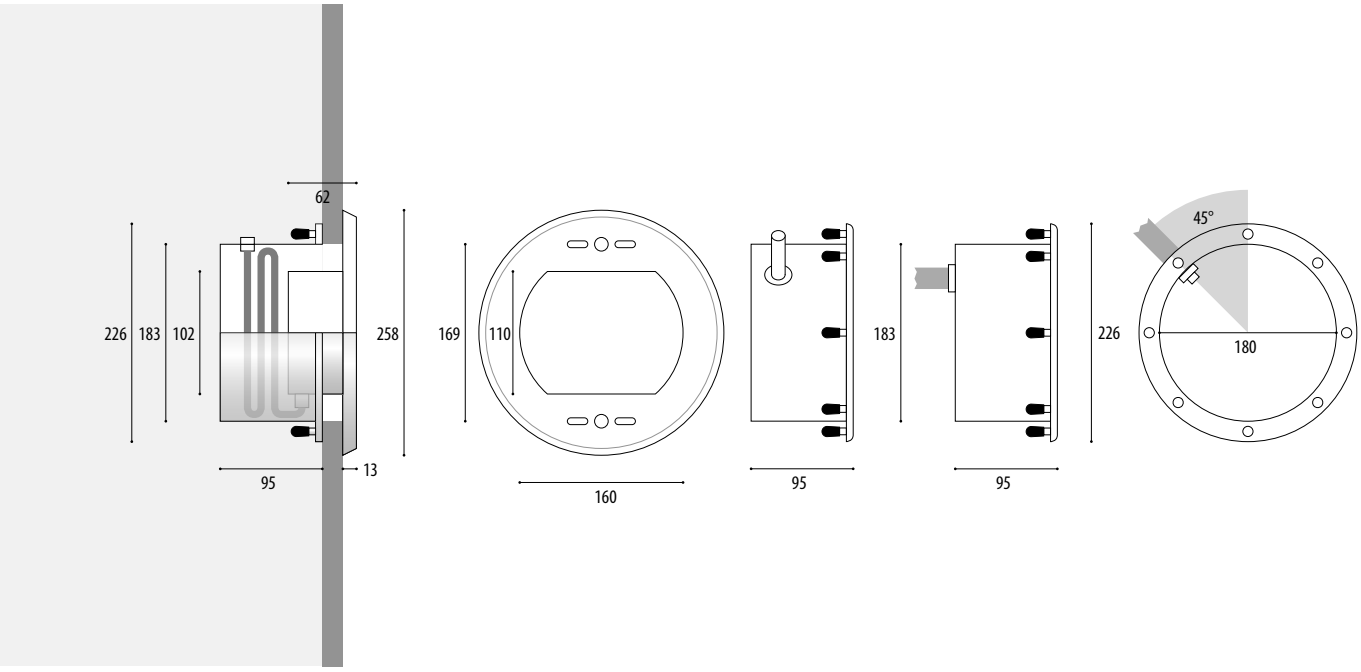

Article number	Lamps	Lumen	Light colour	Wattage	Current/Voltage	Cable, installs	[V]
ONLY UNDERWATER OPERATION							
HALOGEN							
4.0271.03.10	QT12	2.200lm	3000K	100W	12V-AC	3 m (2x2,5 mm2)	B18
4.0271.06.10	QT12	2.200lm	3000K	100W	12V-AC	6 m (2x2,5 mm2)	B18
4.0271.10.10	QT12	2.200lm	3000K	100W	12V-AC	10 m (2x2,5 mm2)	B18
4.0271.03.17	QT16	5.100lm	3000K	175W	12V-AC	3 m (2x2,5 mm2)	A11
4.0271.06.17	QT16	5.100lm	3000K	175W	12V-AC	6 m (2x4,0 mm2)	A11
4.0271.10.17	QT16	5.100lm	3000K	175W	12V-AC	10 m (2x4,0 mm2)	A11
4.0271.03.20	QT16	5.800lm	3000K	200W	30V-DC	3 m (2x2,5 mm2)	A12
4.0271.06.20	QT16	5.800lm	3000K	200W	30V-DC	6 m (2x2,5 mm2)	A12
4.0271.10.20	QT16	5.800lm	3000K	200W	30V-DC	10 m (2x2,5 mm2)	A12
4.0271.03.40	QT16	11.600lm	3000K	400W	30V-DC	3 m (2x2,5 mm2)	A14
4.0271.06.40	QT16	11.600lm	3000K	400W	30V-DC	6 m (2x2,5 mm2)	A14
4.0271.10.40	QT16	11.600lm	3000K	400W	30V-DC	10 m (2x4,0 mm2)	A14
POW-LED 24 V-DC							
4.0271.00.01	18 POW-LED	2700 lm	6000K cold white	total 50 W	CC 700 mA @24 V-DC	3 m (2x2,5 mm2)	W55
4.0271.00.09	24 POW-LED		RGB	all on 30 W	CC 350 mA @24 V-DC	3 m (8x0,5 mm2)	
POW-LED 12 V-DC							
4.0271.00.11	27 POW-LED	4050 lm	6000K cold white	total 85 W	CC 700 mA @12 V-DC	3 m (6x1 + 2x0,5 mm2)	W62
4.0271.00.12	27 POW-LED	3510 lm	3000K warm white	total 85 W	CC 700 mA @12 V-DC	3 m (6x1 + 2x0,5 mm2)	
4.0271.00.13	27 POW-LED	3780 lm	4500K neutral white	total 85 W	CC 700 mA @12 V-DC	3 m (6x1 + 2x0,5 mm2)	
4.0271.00.26	27 POW-LED		capri blue (9 x blue, 9 x green, 9 x white)	total 85 W	CC 700 mA @12 V-DC	3 m (6x1 + 2x0,5 mm2)	
4.0271.00.19	27 POW-LED		RGB	all on 85 W	CC 700 mA @12 V-DC	3 m (6x1 + 2x0,5 mm2)	
INSTALLATION HOUSING							
4.0274.00.00	built in pot of 316L stainless steel with 1,5 m cable duct, cable entry from side						
4.0274.00.50	built in pot of 316L stainless steel with 1,5 m cable duct, cable entry from behind						

4.0271 | SWIMMINGPOOL-LIGHT

FOR ILLUMINATION MEDIUM AND LARGE SWIMMING POOLS.

CENTUM°° Updated version available: 4.0292 – Page 10

IP68 | STAINLESS STEEL V4A 1.4571 316Ti | POW-LED INCL. | 3.000 K 4.500 K 6.000 K | CONSTANT CURRENT KONSTANT STROM | QT12 QT16 12 V-AC 30 V-DC | CABLE INCL. | max 3m

- Protection class IP68 – up to 3m water depth
- Entirely made of stainless steel 316Ti 1.4571
- Round attachment cover, made of stainless steel 316Ti, height 13 mm
- For all standard pool types

...

- QT12 or QT16 light sources
- POW-LED white 12 V-DC
- POW-LED capriblue 12 V-DC
- POW-LED RGB 12 V-DC
- POW-LED white 24 V-DC
- POW-LED RGB 24 V-DC
- optimation of beam angle character
- POW-LED-Platine temperatur control (NTC)
- Beam angle: 80° symmetric/horizontal and 45° asymmetric/vertical (halogen)

...

- Light source can be changed without draining the water (halogen)
- type 4.0272 with frosted glass for soft light distribution (light losses approx. 15 %)
- Supplied with light source and special underwater cable already connected

OPTIONS

Monochrome POW-LED available in red, green, blue, amber and warm white

NOTE

An installation housing is required for a new installation. Please order separately.

Must only be operated with a WIBRE power supply or controler

Power supplies Technical details see from page 234.

5.0100.00.00	Transformer, max 1 spotlights	5.0311.00.00	Transformer, max 2 spotlights
5.0100.00.00		5.0311.00.00	
5.0100.00.00		5.0311.00.00	
5.0311.00.00	Transformer, max 1 spotlights	5.0103.00.00	Transformer, max 2 spotlights
5.0311.00.00		5.0103.00.00	
5.0311.00.00		5.0103.00.00	
5.0410.00.01	Transformer, max 1 spotlights	5.0420.00.01	Transformer, max 2 spotlights
5.0410.00.01		5.0420.00.01	
5.0410.00.01		5.0420.00.01	
5.0420.00.01	Transformer, max 1 spotlights		
5.0420.00.01			
5.0420.00.01			

5.0670.00.40	Constant Current power supply, max 1 spotlights
5.0635.09.24	RGB-Controller, max 1 spotlights

5.0670.11.24	Constant Current power supply, max 1 spotlights
5.0670.11.24	
5.0670.11.24	
5.0670.11.24	
5.0670.19.24	RGB-Controller, max 1 spotlights

ADDITIONAL PARTS

pressure flange
for thin-walled pools or pools
with fitted plastic foil
4.0274.00.25

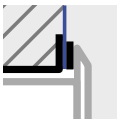

gluing and pressure flange
for adhesive/foil coating
with pressure flange
4.0274.55.25

gluing flange
for adhesive/foil coating
4.0274.55.55

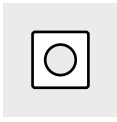

mounting plate
for replacement to Wibre, square,
grade 316, 290 x 290 x 11 mm
9.8167.00.00

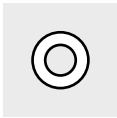

mounting plate
for replacement to Wibre, round,
grade 316, ø 310 x 11 mm
9.8267.00.00

colour disk, for halogene **4.0265.04.00**
yellow **4.0265.05.00**
red **4.0265.06.00** blue **4.0265.07.00** green

RECESSED SPOTLIGHT 4.0273

UNDERWATER IP68

Frosted glass

Installation housing

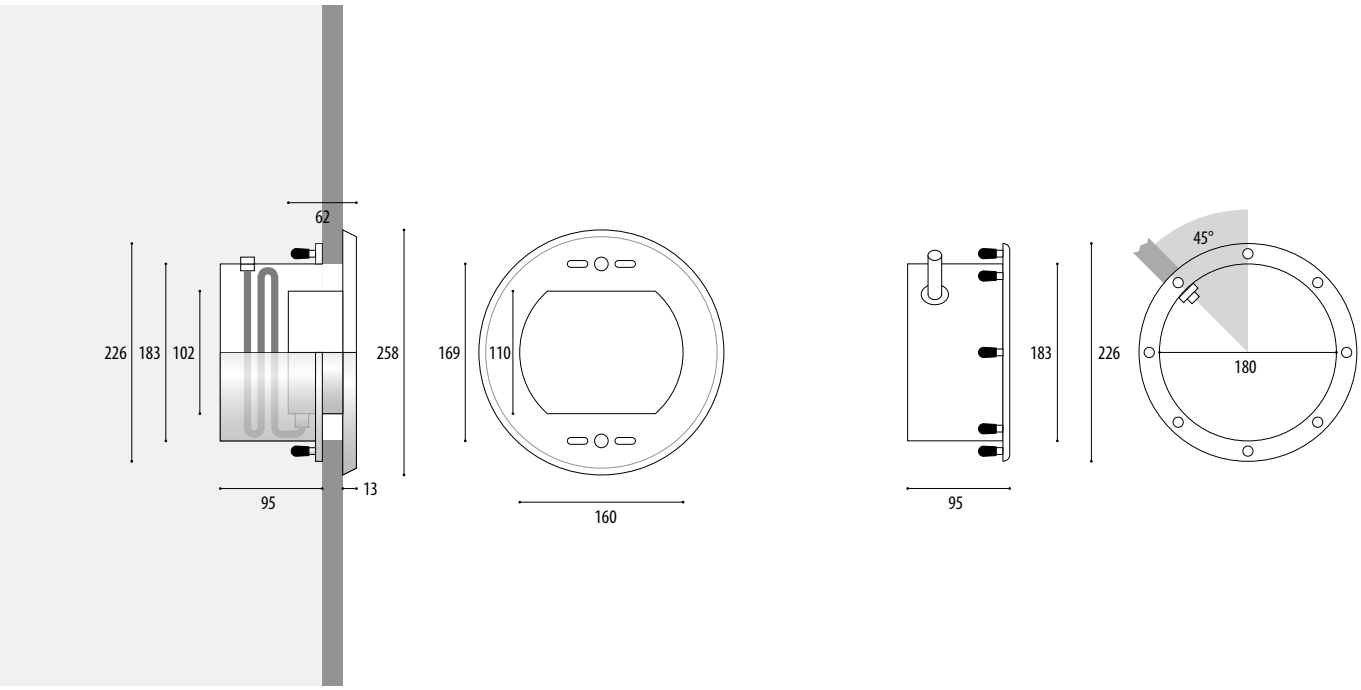

Article number	Lamps	Lumen	Light colour	Wattage	Current/Voltage	Cable, installs	[V]
ONLY UNDERWATER OPERATION							
HALOGEN							
4.0273.00.10	QT12	2.200lm	3000K	100W	12V-AC	3 m (2x2,5 mm2)	B18
4.0273.00.17	QT16	5.100lm	3000K	175W	12V-AC	3 m (2x2,5 mm2)	A11
4.0273.00.20	QT16	5.800lm	3000K	200W	30V-DC	3 m (2x2,5 mm2)	A12
4.0273.00.40	QT16	11.600lm	3000K	400W	30V-DC	3 m (2x2,5 mm2)	A14
POW-LED 24 V-DC							
4.0273.00.01	18 POW-LED	2700 lm	6000K cold white	total 50 W	CC 700 mA @24 V-DC	3 m (2x2,5 mm2)	W55
4.0273.00.09	24 POW-LED		RGB	all on 30 W	CC 350 mA @24 V-DC	3 m (8x0,5 mm2)	
POW-LED 12 V-DC							
4.0273.00.11	27 POW-LED	4050 lm	6000K cold white	total 85 W	CC 700 mA @12 V-DC	3 m (6x1 + 2x0,5 mm2)	W62
4.0273.00.12	27 POW-LED	3510 lm	3000K warm white	total 85 W	CC 700 mA @12 V-DC	3 m (6x1 + 2x0,5 mm2)	
4.0273.00.13	27 POW-LED	3780 lm	4500K neutral white	total 85 W	CC 700 mA @12 V-DC	3 m (6x1 + 2x0,5 mm2)	
4.0273.00.26	27 POW-LED		capri blue (9 x blue, 9 x green, 9 x white)	total 85 W	CC 700 mA @12 V-DC	3 m (6x1 + 2x0,5 mm2)	
4.0273.00.19	27 POW-LED		RGB	all on 85 W	CC 700 mA @12 V-DC	3 m (6x1 + 2x0,5 mm2)	
INSTALLATION HOUSING							
4.0274.73.00	built in pot of 316L stainless steel with 1,5 m cable duct, cable entry from side, saline version						

4.0273 | SWIMMINGPOOL-LIGHT

SALINE VERSION. FOR ILLUMINATION MEDIUM AND LARGE SWIMMING POOLS.

CENTUM°° Updated version available: 4.0292 – Page 14

IP68 | STAINLESS STEEL V4A 1.4539 904L | POW-LED INCL. | 3.000 K 4.500 K 6.000 K | CONSTANT CURRENT KONSTANT STROM | QT12 QT16 12 V-AC 30 V-DC | CABLE INCL. | max 3m

- Protection class IP68 – up to 3m water depth
- Entirely made of stainless steel 904L 1.45739
- Round attachment cover, made of stainless steel 904L, height 13 mm
- Special corrosion-proof version
- for pools with increased saltwater concentration (up to 3.5 %)
- For all standard pool types

...

- QT12 or QT16 light sources
- POW-LED white 12 V-DC
- POW-LED capriblue 12 V-DC
- POW-LED RGB 12 V-DC
- POW-LED white 24 V-DC
- POW-LED RGB 24 V-DC
- optimation of beam angle character
- POW-LED-Platine temperatur control (NTC)
- Beam angle: 80° symmetric/horizontal and 45° asymmetric/vertical (halogen)

...

- Light source can be changed without draining the water (halogen)
- type 4.0273.01 with frosted glass for soft light distribution (light losses approx. 15 %)
- Supplied with light source and special underwater cable already connected

flanges and mounting plates for saline versions on request

Power supplies Technical details see from page 234.

5.0100.00.00	Transformer, max 1 spotlights	**5.0311.00.00**	Transformer, max 2 spotlights
5.0311.00.00	Transformer, max 1 spotlights	**5.0103.00.00**	Transformer, max 2 spotlights
5.0410.00.01	Transformer, max 1 spotlights	**5.0420.00.01**	Transformer, max 2 spotlights
5.0420.00.01	Transformer, max 1 spotlights		

5.0670.00.40	Constant Current power supply, max 1 spotlights
5.0635.09.24	RGB-Controller, max 1 spotlights

5.0670.11.24	Constant Current power supply, max 1 spotlights
5.0670.11.24	
5.0670.11.24	
5.0670.11.24	
5.0670.19.24	RGB-Controller, max 1 spotlights

NOTE

An installation housing is required for a new installation. Please order separately.

SOLE SALINE

Please check suitability (water analysis)

Must only be operated with a WIBRE power supply or controler

OPTIONS

Monochrome POW-LED available in red, green, blue, amber and warm white

ADDITIONAL PARTS

colour disk, for halogene **4.0265.04.00**
yellow **4.0265.05.00**
red **4.0265.06.00** blue **4.0265.07.00** green

RECESSED SPOTLIGHT 4.0275

UNDERWATER IP68

Installation housing

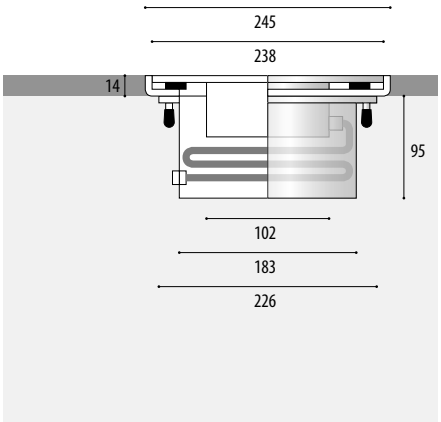

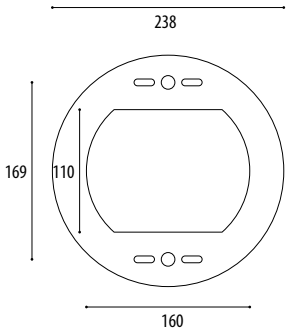

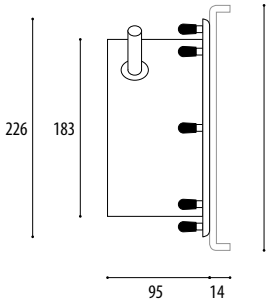

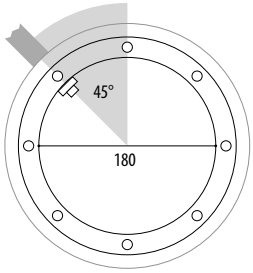

Article number	Lamps	Lumen	Light colour	Wattage	Current/Voltage	Cable, installs	[V]
ONLY UNDERWATER OPERATION							
HALOGEN							
4.0275.00.10	QT12	2.200lm	3000K	100W	12V-AC	3 m (2x2,5 mm2)	B18
4.0275.00.17	QT16	5.100lm	3000K	175W	12V-AC	3 m (2x2,5 mm2)	A11
4.0275.00.20	QT16	5.800lm	3000K	200W	30V-DC	3 m (2x2,5 mm2)	A12
POW-LED 24 V-DC							
4.0275.00.01	18 POW-LED	2700 lm	6000K cold white	total 50 W	CC 700 mA @24 V-DC	3 m (2x2,5 mm2)	W55
4.0275.00.09	24 POW-LED		RGB	all on 30 W	CC 350 mA @24 V-DC	3 m (8x0,5 mm2)	
POW-LED 12 V-DC							
4.0275.00.11	27 POW-LED	4050 lm	6000K cold white	total 85 W	CC 700 mA @12 V-DC	3 m (6x1 + 2x0,5 mm2)	W62
4.0275.00.12	27 POW-LED	3510 lm	3000K warm white	total 85 W	CC 700 mA @12 V-DC	3 m (6x1 + 2x0,5 mm2)	
4.0275.00.13	27 POW-LED	3780 lm	4500K neutral white	total 85 W	CC 700 mA @12 V-DC	3 m (6x1 + 2x0,5 mm2)	
4.0275.00.26	27 POW-LED		capri blue (9 x blue, 9 x green, 9 x white)	total 85 W	CC 700 mA @12 V-DC	3 m (6x1 + 2x0,5 mm2)	
4.0275.00.19	27 POW-LED		RGB	all on 85 W	CC 700 mA @12 V-DC	3 m (6x1 + 2x0,5 mm2)	
INSTALLATION HOUSING							
4.0274.75.00	Built-in pot, marine grade 316L stainless steel with 1.5 m cable protection tube and plastic angled ring						

4.0275 | SWIMMINGPOOL-LIGHT

FOR FLUSH-MOUNTED INSTALLATION. FOR ILLUMINATION MEDIUM AND LARGE SWIMMING POOLS.

CENTUM°° Updated version available: 4.0291 – Page 18

IP68 | STAINLESS STEEL V4A 1.4571 316Ti | POW-LED INCL. | 3.000 K 4.500 K 6.000 K | CONSTANT CURRENT KONSTANT STROM | QT12 QT16 12 V-AC 30 V-DC | CABLE INCL. | max 3m

· Protection class IP68 – up to 3m water depth
· Entirely made of stainless steel 316TiL 1.45771
· flush mounted cover, made of stainless steel 316Ti
· in connection with angled plastic ring for flush-mounted installation in tiled concrete pools (standard for 14 mm)
...
· QT12 or QT16 light sources
· POW-LED white 12 V-DC
· POW-LED capriblue 12 V-DC
· POW-LED RGB 12 V-DC
· POW-LED white 24 V-DC
· POW-LED RGB 24 V-DC
· optimation of beam angle character
· POW-LED-Platine temperatur control (NTC)
· Beam angle: 80° symmetric/horizontal and 45° asymmetric/vertical (halogen)
...
· Light source can be changed without draining the water (halogen)
· type 4.0275.01 with frosted glass for soft light distribution (light losses approx. 15 %)
· Supplied with light source and special underwater cable already connected

flanges and mounting plates for flush versions on request

Power supplies Technical details see from page 234.

5.0100.00.00	Transformer, max 1 spotlights	5.0311.00.00	Transformer, max 2 spotlights
5.0311.00.00	Transformer, max 1 spotlights	5.0103.00.00	Transformer, max 2 spotlights
5.0410.00.01	Transformer, max 1 spotlights	5.0420.00.01	Transformer, max 2 spotlights

5.0670.00.40	Constant Current power supply, max 1 spotlights
5.0635.09.24	RGB-Controller, max 1 spotlights

5.0670.11.24	Constant Current power supply, max 1 spotlights
5.0670.11.24	
5.0670.11.24	
5.0670.11.24	
5.0670.19.24	RGB-Controller, max 1 spotlights

NOTE

An installation housing is required for a new installation. Please order separately.

Must only be operated with a WIBRE power supply or controler

OPTIONS

Monochrome POW-LED available in red, green, blue, amber and warm white

CUSTOM MADE

Variants for installation in stainless steel or plastic pools or as a saltwater version with special flanges

RECESSED SPOTLIGHT 4.0301

UNDERWATER | IP68

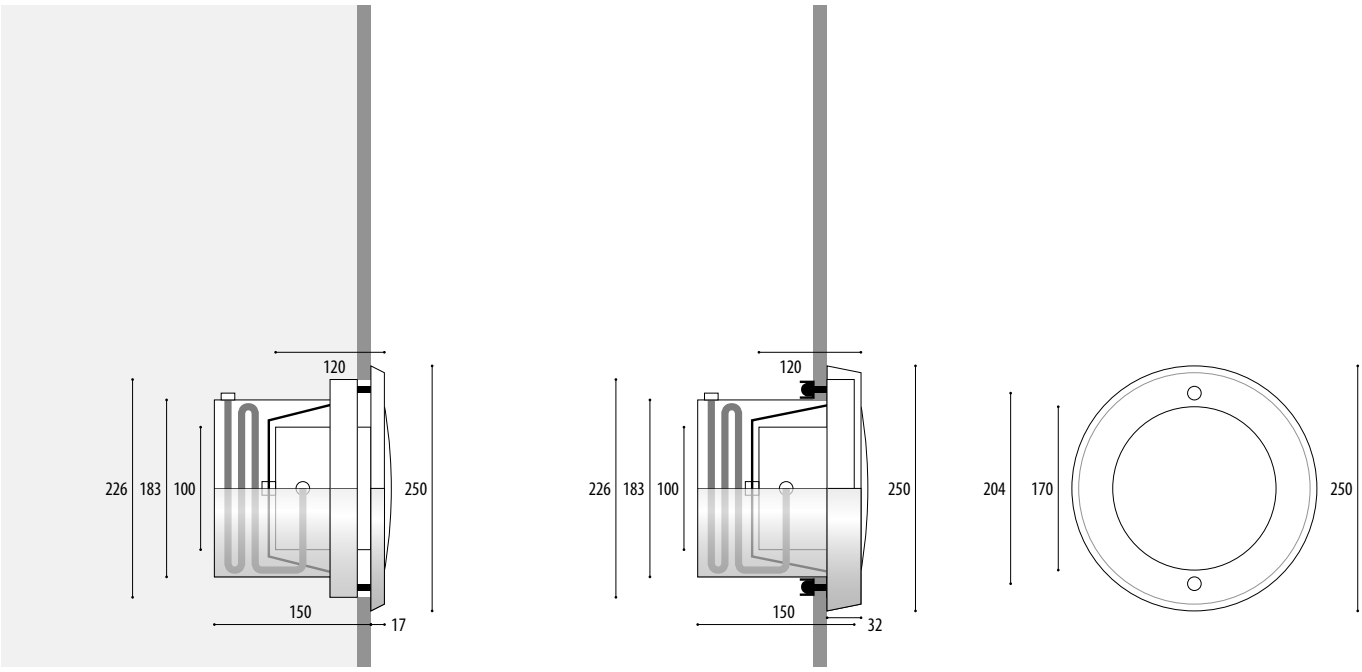

Article number	Lamps	Wattage	Current/Voltage	Light colour	Lumen	Cable, installs	[V]
ONLY UNDERWATER OPERATION							
17 MM FRAME - FOR CONCRETE POOLS							
4.0301.00.00	PAR56	300W	12V-AC	3000K	4.000lm	UW, 2x6,0 qmm	G41
4.0300.00.00	built in pot of 316L stainless steel for 4.0301, with 1,5 m cable duct						
32 MM FRAME - FOR PLASTIC OR METAL POOLS WITH PRESSURE FLANGE							
4.0311.00.00	PAR56	300W	12V-AC	3000K	4.000lm	UW, 2x6,0 qmm	G41
4.0312.00.00	built in pot of 316L stainless steel for 4.0311, with 1,5 m cable duct						
PAR56 LED LAMPS							
7.0311.20.20	LED	16W	12 V-AC	6500K	1.500lm		
7.0311.21.19	LED RGB	12W	12 V-AC				
5.0691.09.01	Remote Control		for PAR56 LED				
5.0691.09.02	Receiver		for remote control 5.0691.09.01				

4.0301 | SWIMMINGPOOL-LIGHT PAR56

FOR ILLUMINATING PRIVATE OR HOTEL POOLS.

IP68 | STAINLESS STEEL V4A 1.4571 316Ti | 12 V-AC | CABLE INCL. | INCL | max 3m

- Protection class IP68 – up to 3m water depth
- Entirely made of stainless steel 316Ti 1.4571
- With 17 mm (4.0301) or 32 mm (4.0311) thick cover on the basis of a PAR56 light source
- (4.0301) for concrete pools in conjunction with built-in pot 4.0300
- (4.0311) for plastic or metal pools with pressure flange in conjunction with built-in pot 4.0312
- Light source can be changed without draining the water
- Supplied with light source and underwater cable (3 m) already connected (2 x 6 qmm)

Power supplies Technical details see from page 234.

5.0103.00.00	Transformer, max 1 spotlights	**5.0107.00.00**	Transformer, max 2 spotlights
5.0103.00.00	Transformer, max 1 spotlights	**5.0107.00.00**	Transformer, max 2 spotlights

NOTE

Please order the installation housing separately

LED

LED with higher lumen output on request

OPTIONS

Coloured PAR56 light sources (300 W/12 V) available in green and blue

Cable lengths available according to requirements

RECESSED SPOTLIGHT 4.1900

UNDERWATER | IP68

- Illumination for large pools
- Powerful with HIT or POW-LED
- Variants for all types of pools

4.1900 | SWIMMINGPOOL-LIGHT

FOR ILLUMINATING LEISURE POOLS AND SPORT POOLS (APPROX. 25 X 12 METERS).

IP68 | STAINLESS STEEL V4A 1.4571 316Ti | POW-LED INCL. | HIT INCL. | 12 V-DC 230 V | CABLE INCL. | max 3m | CE

· Protection system IP68 – for a water depth of up to 3 m
· Entirely made of stainless steel 316Ti 1.4571
...
· HIT-DE metal vapour lamps (fully wired with ballast device)
· Beam angle: 80° symmetric/horizontal and 45° asymmetric/vertical
· POW-LED white 12 V-DC

· For leisure pools and sports pools with walkaround or surrounding shaft
· Wall installation in all standard pool types
· Light source is changed from the pool walkaround.
· Supplied with light source and silicon cable (3 m) already connected

ADDITIONAL PARTS

housing extension
per each 380 mm
9.1920.00.00

housing shorten
minimal 280 mm
9.1921.00.00

PRODUCT LINE

4.2000
Recessed spotlights
(underwater)
> Page 82

< Project
SALÜ, Lüneburg, Germany
Photo: Oliver Reck, Studio Reck
www.studioreck.de

RECESSED SPOTLIGHT 4.1900

UNDERWATER

IP68

00 TILED CONCRETE POOLS (TILES + MORTAR 15–20 MM)

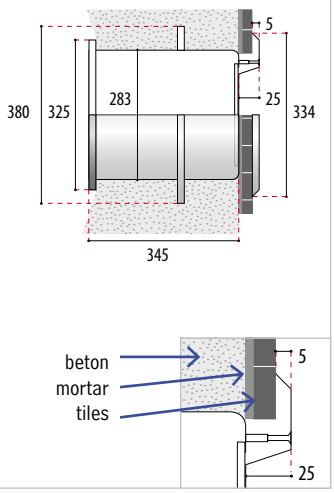

01 CONCRETE POOLS WITH FITTED FOIL (PRESSURE FLANGE)

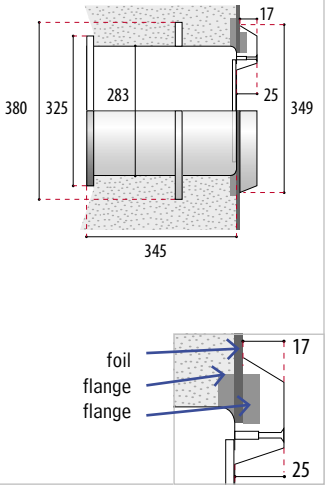

02 THIN-WALLED POOLS (PRESSURE FLANGE)

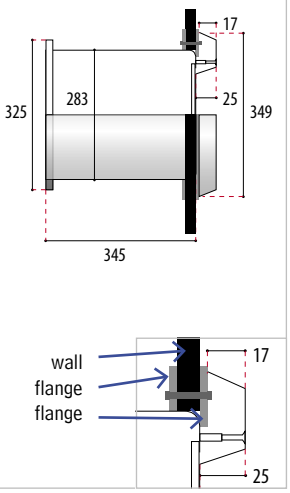

03 POOLS WITH ADHESIVE/FOIL COATINGS (ADHESIVE FLANGE)

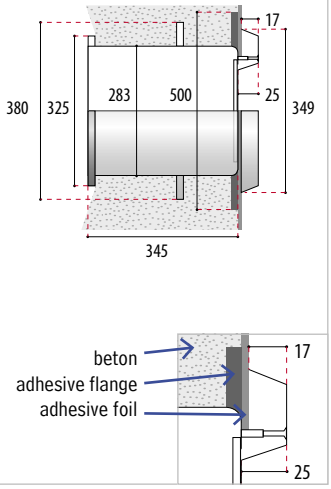

04 STAINLESS STEEL POOLS (WELDED FLANGE)

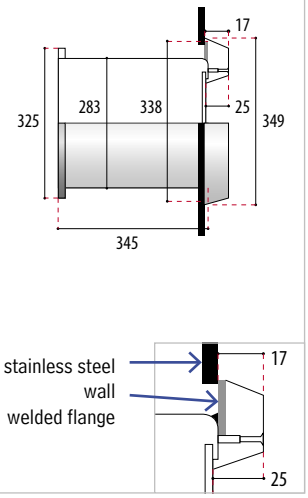

50 TILED POOLS WITH MOVABLE FLOORS (TILES + MORTAR 16–20 MM)

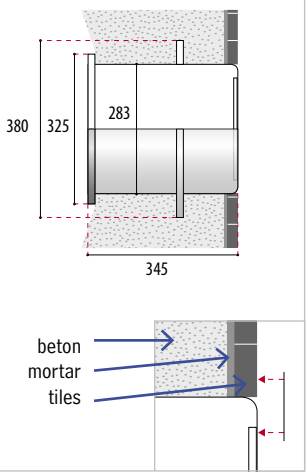

60 LATER INSTALLATION (TILES + MORTAR 15–20 MM)

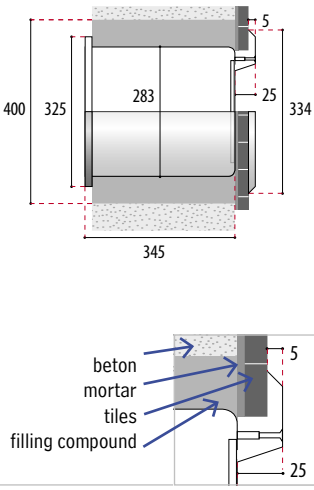

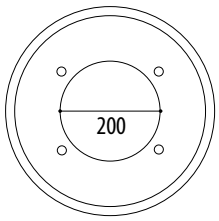

00 Article number	01 Article number	02 Article number	03 Article number	Lamps	Light colour	Wattage	Lumen	Voltage	[V]
ONLY UNDERWATER OPERATION									
4.1900.00.11	4.1900.01.11	4.1900.02.11	4.1900.03.11	24 POW-LED	6000K cold white	total 62 W	5520 lm	CV 12 V DC	W82
4.1900.00.15	4.1900.01.15	4.1900.02.15	4.1900.03.15	HIT-DE	4200K	150W	13000	230V	J13
4.1900.00.70	4.1900.01.70	4.1900.02.70	4.1900.03.70	HIT-DE	4200K	70W	6200	230V	J11
4.1900.00.30	4.1900.01.30	4.1900.02.30	4.1900.03.30	PAR56	3000K	300W	4.000lm	12V-AC	G41

04 Article number	50 Article number	60 Article number	Lamps	Light colour	Wattage	Lumen	Voltage	[V]
ONLY UNDERWATER OPERATION								
4.1900.04.11	4.1900.50.11	4.1900.60.11	24 POW-LED	6000K cold white	total 62 W	5520 lm	CV 12 V DC	W82
4.1900.04.15	4.1900.50.15	4.1900.60.15	HIT-DE	4200K	150W	13000	230V	J13
4.1900.04.70	4.1900.50.70	4.1900.60.70	HIT-DE	4200K	70W	6200	230V	J11
4.1900.04.30	4.1900.50.30	4.1900.60.30	PAR56	3000K	300W	4.000lm	12V-AC	G41

IP68 UNDERWATER

< Project
Tauern Spa Kaprun, Austria
Photo: Photoart Reifmüller

Power supplies Technical details see from page 234.

5.0670.02.72	Power supply, max 2 spotlights	5.0670.04.72	Power supply, max 2
Integrated			
Integrated			
5.0103.00.00	Transformer, max 1 spotlights		

5.0670.02.72	Power supply, max 2 spotlights	5.0670.04.72	Power supply, max 2
Integrated			
Integrated			
5.0103.00.00	Transformer, max 1 spotlights		

NOTE

CUSTOM MADE — Customer-specific installations and special designs available on request.

OPTIONS

3.000 K 4.500 K 6.000 K — POW-LED cold white, warm white and neutral white available

RGB RGB-W — POW-LED RGB or RGB-W available

RECESSED SPOTLIGHT 4.2000

UNDERWATER | IP68

- High illumination for competition pool
- Very efficient with 150 lumen/Watt
- Variants for all types of pools

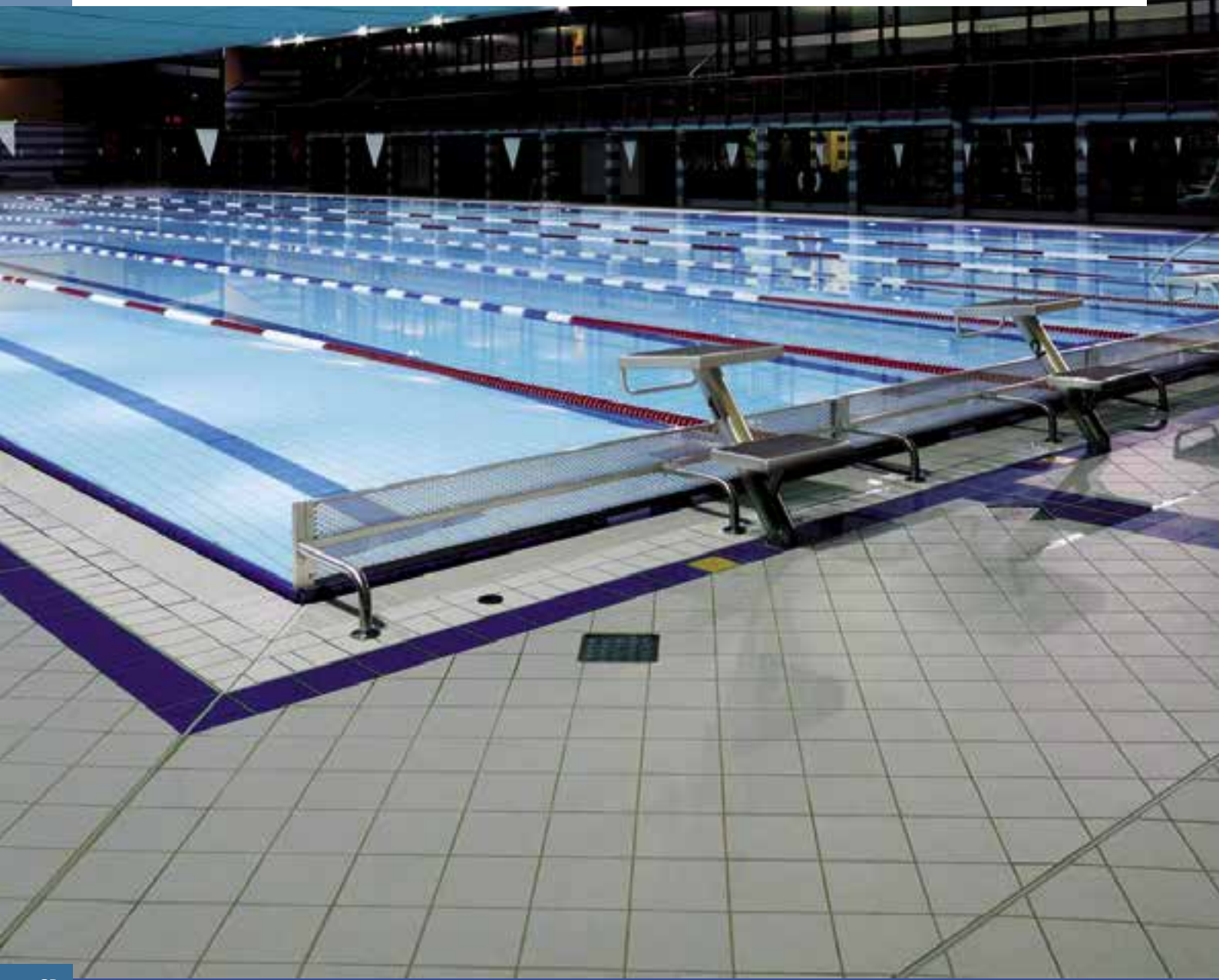

4.2000 | SWIMMINGPOOL-LIGHT

FOR ILLUMINATING SPORT POOLS AND COMPETITION POOLS (APPROX. 50 X 20 METERS).

IP68 | STAINLESS STEEL V4A 1.4571 316Ti | POW-LED INCL. | HIT INCL. | 12 V-DC 230 V | CABLE INCL. | max 3m | CE

· Protection system IP68 – for a water depth of up to 3 m
· Entirely made of stainless steel 316Ti 1.4571
...
· HIT metal vapour lamps (E40, fully wired with ballast)
· Beam angle: 80° symmetric/horizontal and 45° asymmetric/vertical
· POW-LED white 12 V-DC
...
· For competition pools and sports pools with walkaround or surrounding shaft
· Wall installation in all standard pool types (see table)
· Light source is changed from the pool walkaround.
· Supplied with light source and silicon cable already connected

ADDITIONAL PARTS

adapter frame
made of white plastic, for adapting the marine grade 316L stainless steel cover
9.2000.00.00

housing extension
per each 400 mm
9.2020.00.00

housing shorten
minimal 290 mm
9.2021.00.00

PRODUCT LINE

4.1900
Recessed spotlights
(underwater)
> Page 78

< Project
Roland Matthes Swimming Hall, Erfurt, Germany
© Wolfgang Fallier

RECESSED SPOTLIGHT 4.2000

UNDERWATER

IP68

00 TILED CONCRETE POOLS (TILES+MORTAR 15–20 MM)

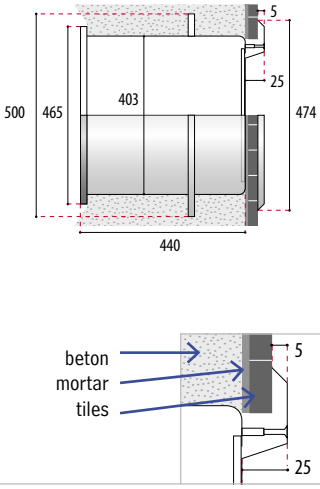

01 CONCRETE POOLS WITH FITTED FOIL (PRESSURE FLANGE)

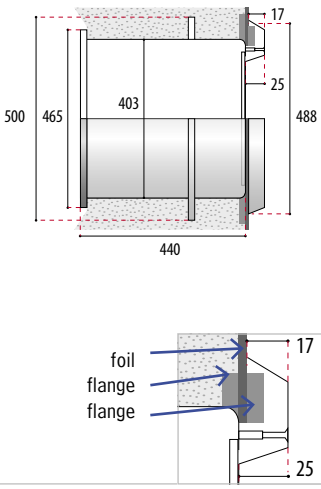

02 THIN-WALLED POOLS (PRESSURE FLANGE)

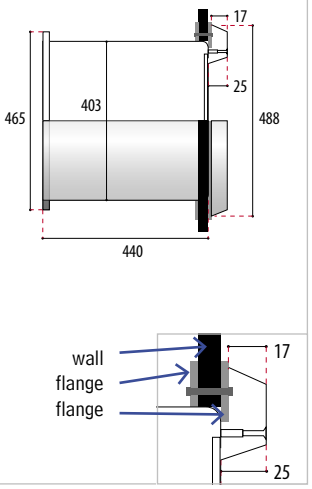

03 POOLS WITH ADHESIVE/FOIL COATINGS (ADHESIVE FLANGE)

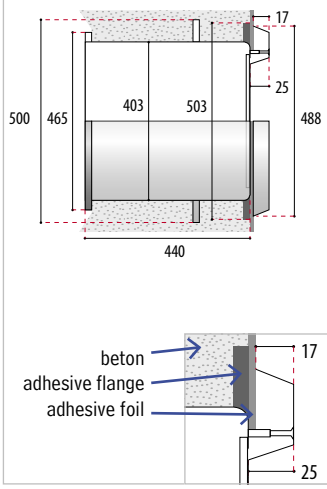

04 STAINLESS STEEL POOLS (WELDED FLANGE)

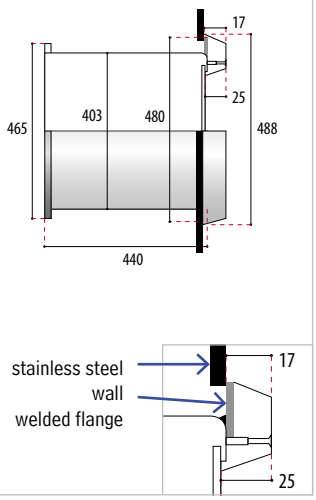

50 TILED POOLS WITH MOVABLE FLOORS (TILES+MORTAR 16–20 MM)

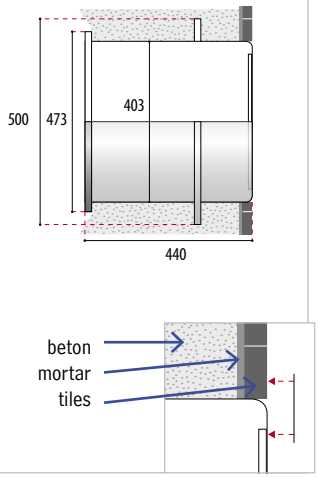

60 LATER INSTALLATION (TILES+MORTAR 15–20 MM)

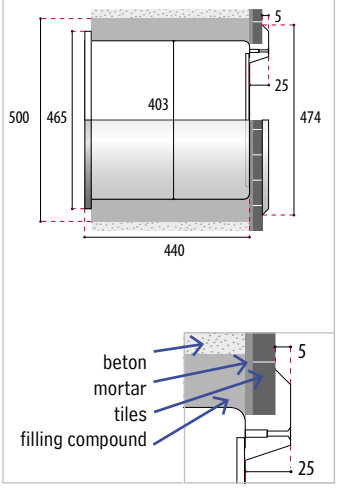

NOTE

Total length of the light at POW-LED = length + 70 mm

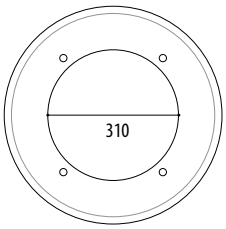

00	01	02	03						
Article number	Article number	Article number	Article number	Lamps	Light colour	Wattage	Lumen	Voltage	[V]
ONLY UNDERWATER OPERATION									
4.2002.00.11	4.2002.01.11	4.2002.02.11	4.2002.03.11	High-POW-LED	6500K cold white	total 170 W	25000 lm	CV 12 V-DC	
4.2002.00.12	4.2002.01.12	4.2002.02.12	4.2002.03.12	High-POW-LED	3000K warm white	total 170 W	20110 lm	CV 12 V-DC	
4.2002.00.13	4.2002.01.13	4.2002.02.13	4.2002.03.13	High-POW-LED	4000K neutral white	total 170 W	21680 lm	CV 12 V-DC	
4.2000.00.25	4.2000.01.25	4.2000.02.25	4.2000.03.25	HIT (E40)	4200K	250W	21.000lm	230V	M14
4.2000.00.40	4.2000.01.40	4.2000.02.40	4.2000.03.40	HIT (E40)	4200K	400W	42.000lm	230V	M15

04	50	60						
Article number	Article number	Article number	Lamps	Light colour	Wattage	Lumen	Voltage	[V]
ONLY UNDERWATER OPERATION								
4.2002.04.11	4.2002.50.11	4.2002.60.11	High-POW-LED	6500K cold white	total 170 W	25000 lm	CV 12 V-DC	
4.2002.04.12	4.2002.50.12	4.2002.60.12	High-POW-LED	3000K warm white	total 170 W	20110 lm	CV 12 V-DC	
4.2002.04.13	4.2002.50.13	4.2002.60.13	High-POW-LED	4000K neutral white	total 170 W	21680 lm	CV 12 V-DC	
4.2000.04.25	4.2000.50.25	4.2000.60.25	HIT (E40)	4200K	250W	21.000lm	230V	M14
4.2000.04.40	4.2000.50.40	4.2000.60.40	HIT (E40)	4200K	400W	42.000lm	230V	M15

IP68 UNDERWATER

< Project
THERMEN & BADEWELT SINSHEIM, Germany
www.badewelt-sinsheim.de

Power supplies Technical details see from page 234.

	Integrated
	Integrated
	Integrated
	Integrated
	Integrated

	Integrated
	Integrated
	Integrated
	Integrated
	Integrated

NOTE

CUSTOM MADE — Customer-specific installations and special designs available on request.

Total length of the light at POW-LED = length + 70 mm

OPTIONS

RGB RGB-W — POW-LED RGB or RGB-W on request

UNDERWATER IP68

- Light output equivalent replacement for HIT 250 W/400 W
- Up to 25000 lumen light intensity
- Easy installation

4.2012 | RETROFIT-INSERTION FOR 4.2000

FOR RETROFITTING IN EXISTING SWIMMING POOLS WITH EXISTING SPOTLIGHTS.

ALU | POW-LED INCL. | 3.000 K 4.000 K 6.500 K | CONSTANT VOLTAGE / KONSTANT SPANNUNG | CABLE INCL. | max 3m | CE | III

· Retrofit insertion for installation in existing spotlights 4.2000 for retrofitting halogen to LED
· Entirely made of high-quality anodized aluminum
...
· HIGH-POW-LED white 12 V-DC
· light distribution especially for swimming pool lighting
· wide- and deep beam angle
...
· Delivered ready for connection with end cover
· Constant-voltage power source is preassembled (incl.)

PRODUCT LINE

4.2000
Recessed spotlights
(underwater)
> Page 82

< Project
Badeland Wolfsburg, Germany

RECESSED SPOTLIGHT 4.2012

UNDERWATER

IP68

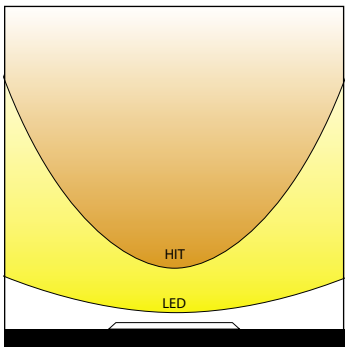

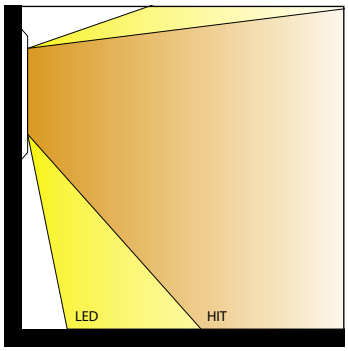

comparison POW-LED and HIT

Article number	Lamps	Lumen	Light colour	Wattage	Voltage
VERSIONS: ONLY UNDERWATER OPERATION					
4.2012.00.11	High-POW-LED	25000 lm	6500K cold white	total 170 W	CV 12 V-DC
4.2012.00.12	High-POW-LED	20110 lm	3000K warm white	total 170 W	CV 12 V-DC
4.2012.00.13	High-POW-LED	21680 lm	4000K neutral white	total 170 W	CV 12 V-DC

IP68 UNDERWATER

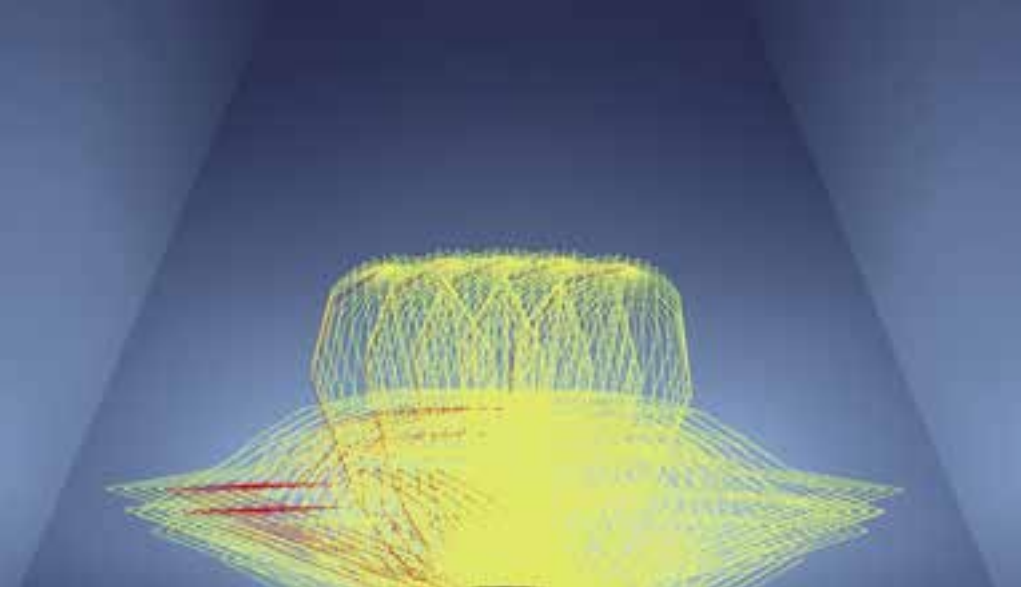

< Simulation

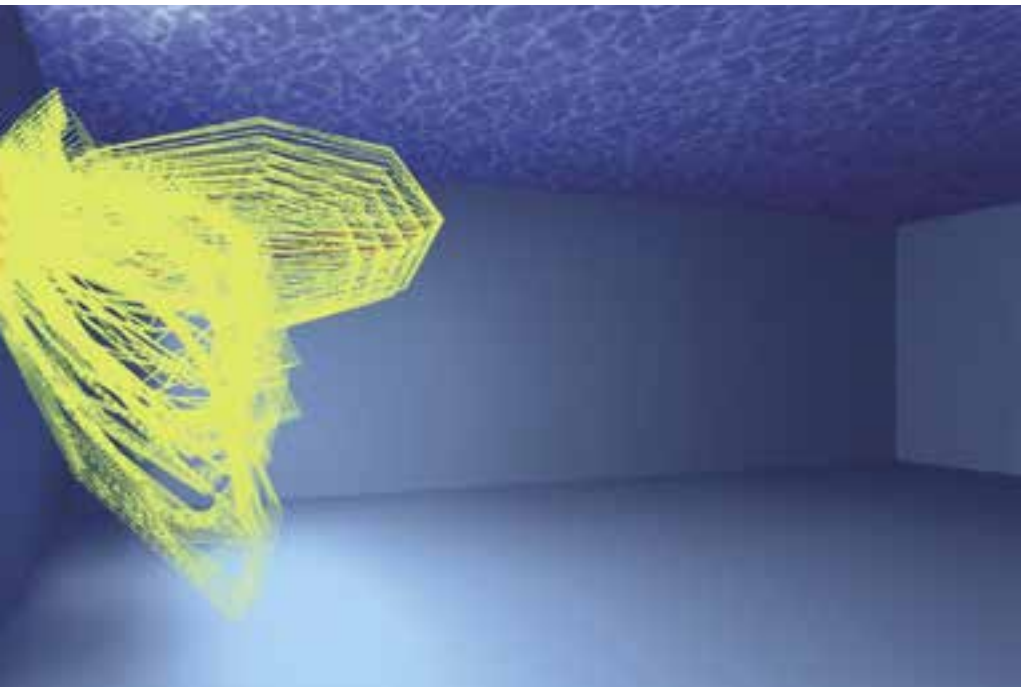

< Simulation

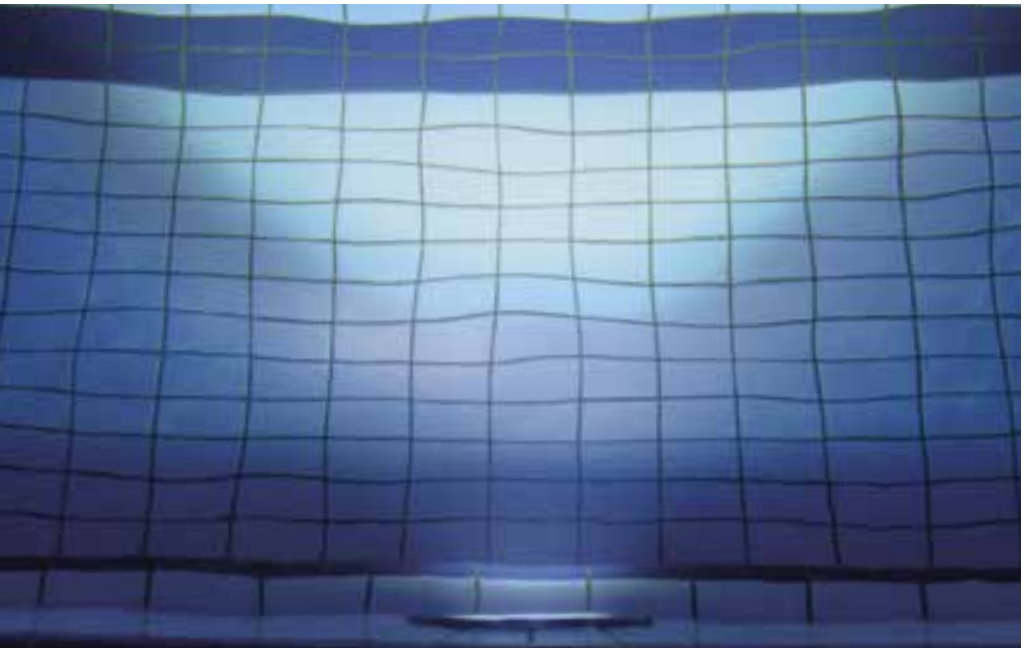

	Power supplies	Technical details see from page 234.
	Integrated	
	Integrated	
	Integrated	

NOTE

?

Replacement/exchange requires separate agreements.

OPTIONS

RGB
RGB-W

POW-LED RGB or RGB-W available

RECESSED SPOTLIGHT 4.1911

UNDERWATER | IP68

Article number	Lamps	Lumen	Light colour	Wattage	V/mA	Radation angle	[V]
VERSIONS: ONLY UNDERWATER OPERATION							
4.1911.00.11	24 POW-LED	5520 lm	6000K cold white	total 62 W	CV 12 V DC	30°-120° Multiflux	W82
4.1911.00.12	24 POW-LED	4560 lm	3000K warm white	total 62 W	CV 12 V DC	30°-120° Multiflux	
4.1911.00.13	24 POW-LED	5160 lm	4500K neutral white	total 62 W	CV 12 V DC	30°-120° Multiflux	

4.1911 | RETROFIT-INSERTION FOR 4.1900

FOR RETROFITTING IN EXISTING SWIMMING POOLS WITH EXISTING SPOTLIGHTS.

STAINLESS STEEL V4A 1.4571 316Ti | ALU | POW-LED INCL. | 3.000 K 4.500 K 6.000 K | 12 V-DC | CABLE INCL. | max 3m

· Retrofit insertion for installation in existing spotlights 4.1900 for retrofitting halogen to LED
· Entirely made of stainless steel 316Ti 1.4571 and high-quality anodized aluminum
...
· POW-LED white 12 V-DC
· light distribution especially for swimming pool lighting
...
· Delivered ready for connection with end cover
· Constant-current power source ordered separately

NOTE

Replacement/exchange requires separate agreements.

OPTIONS

POW-LED monochrome, single colour in green, red, amber, turquoise, capriblue

RGB RGB-W — POW-LED RGB or RGB-W available

Power supplies — Technical details see from page 234.

5.0670.01.72	Power supply, max 1 spotlights	5.0670.02.72	Power supply, max 2 spotlights	5.0670.04.72	Power supply, max 4 spotlights
5.0670.01.72		5.0670.02.72		5.0670.04.72	
5.0670.01.72		5.0670.02.72		5.0670.04.72	

RECESSED SPOTLIGHT 4.0012

UNDERWATER | IP68

- Miniature spotlight for effect illumination
- Very low energy consumption
- Installation in all common types of pools

4.0012 | RECESSED-SPOTLIGHT

FOR ACCENTUATION IN SMALL SWIMMING POOLS, WHIRLPOOLS AND WATER DISPLAYS.

IP68 | STAINLESS STEEL V4A 1.4571 316Ti | ELECTRO POLISHED | POW-LED INCL. | 3.000 K 4.500 K 6.000 K BLUE | RGB | CONSTANT CURRENT KONSTANT STROM | DALI 1-10 V OPTIONAL DIMM | CABLE INCL. | max 5m | CE | III

· Protection class IP68 – Water depth 5 m
· Entirely made of stainless steel 316Ti
· Round or square attachment cover, height 3mm
...
· POW-LED cold white, warm white, neutral white
· POW-LED blue
· Multichip POW-LED RGB
· operating mode: constant current
· Rotationally symmetric light distribution
...
· Cable pressure sleeve, stainless steel 316Ti
· Installation housing made of stainless steel 316Ti with 1.5 m cable protection tube and connection socket
· supplied with 3m of UW-cable

PRODUCT LINE

4.0011
Recessed spotlights (exterior)
> Page 158

4.0011.15
Surface spotlights
> Page 118

< Project
Amanzoe, Argolida, Greece
Planner: FOSS SA

RECESSED SPOTLIGHT 4.0012

UNDERWATER

IP68

Installation housing

Installation housing

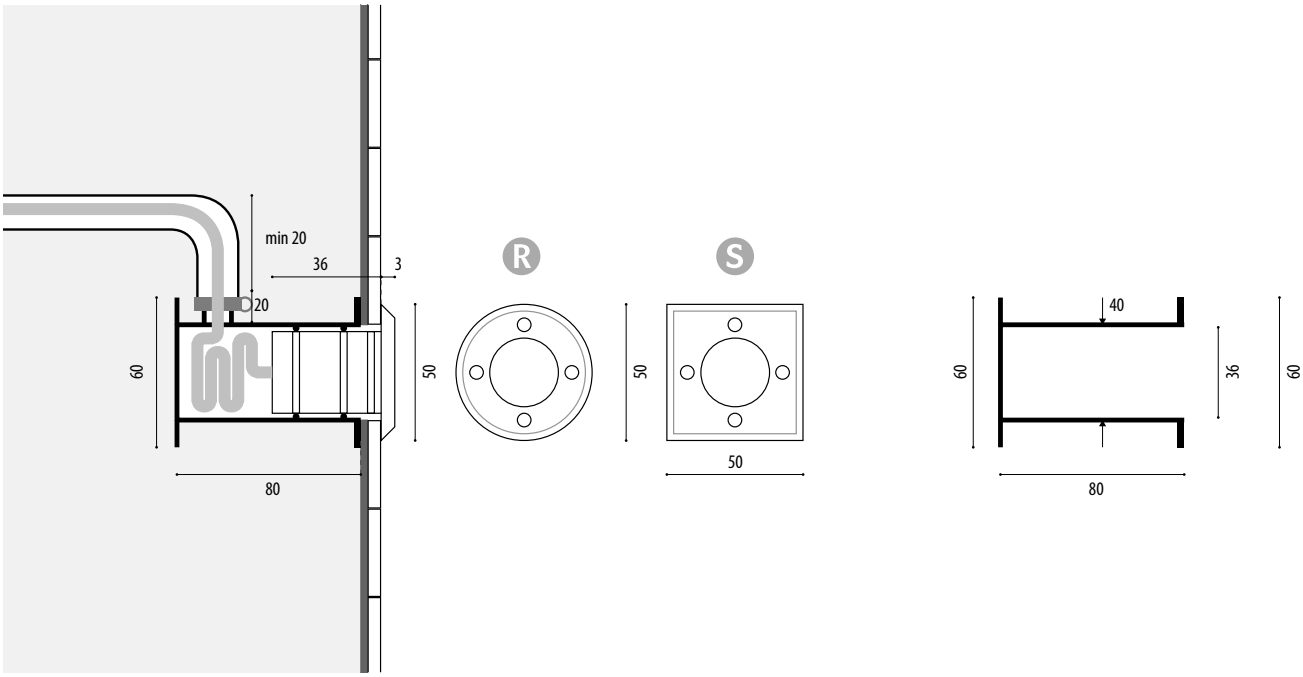

R Article number	S Article number	Lamps	Lumen	Light colour	Wattage	Current	Radation angle	Cable, installs	[V]
VERSIONS: ONLY UNDERWATER OPERATION									
4.0012.20.11	**4.0012.40.11**	1 POW-LED	165 lm	6000K cold white	total 2 W	CC 350 mA	10° spot	UW, 2x0,5 qmm	V12
4.0012.20.12	**4.0012.40.12**	1 POW-LED	135 lm	3000K warm white	total 2 W	CC 350 mA	10° spot	UW, 2x0,5 qmm	
4.0012.20.13	**4.0012.40.13**	1 POW-LED	155 lm	4500K neutral white	total 2 W	CC 350 mA	10° spot	UW, 2x0,5 qmm	
4.0012.20.16	**4.0012.40.16**	1 POW-LED	400 mW/LED	blue	total 2 W	CC 350 mA	10° spot	UW, 2x0,5 qmm	
4.0012.20.19	**4.0012.40.19**	1 Multichip POW-LED		RGB	all on 5 W	CC 350 mA	120° flood	UW, 6x0,5 qmm	

INSTALLATION HOUSING

4.0012.01.00	made of V4A stainless steel with 1.5 m protective cable tube and M20 plastic terminating connection, for welding into stainless steel pools and for installation in concrete pools with tile covering
4.0012.02.00	made of V4A stainless steel with 1.5m protective cable tube and M20 plastic terminating connection, for installation in thin-walled pools and foil lined pools (pressure flange ø 80 mm) - spotlight with special cover ø 74 mm
4.0012.03.00	made of V4A stainless steel with 1.5 m protective cable tube and M20 plastic terminating connection, for installation in pools with adhesive/foil coating (adhesive flange) AD 150 mm
4.0012.10.00	made of V4A stainless steel with 1.5 m protective cable tube and M20 plastic terminating connection, for installation in the floor area (without sheathing flange) with a housing installation height of max. 80 mm

RECESSED SPOTLIGHT 4.0012

IP68 | UNDERWATER

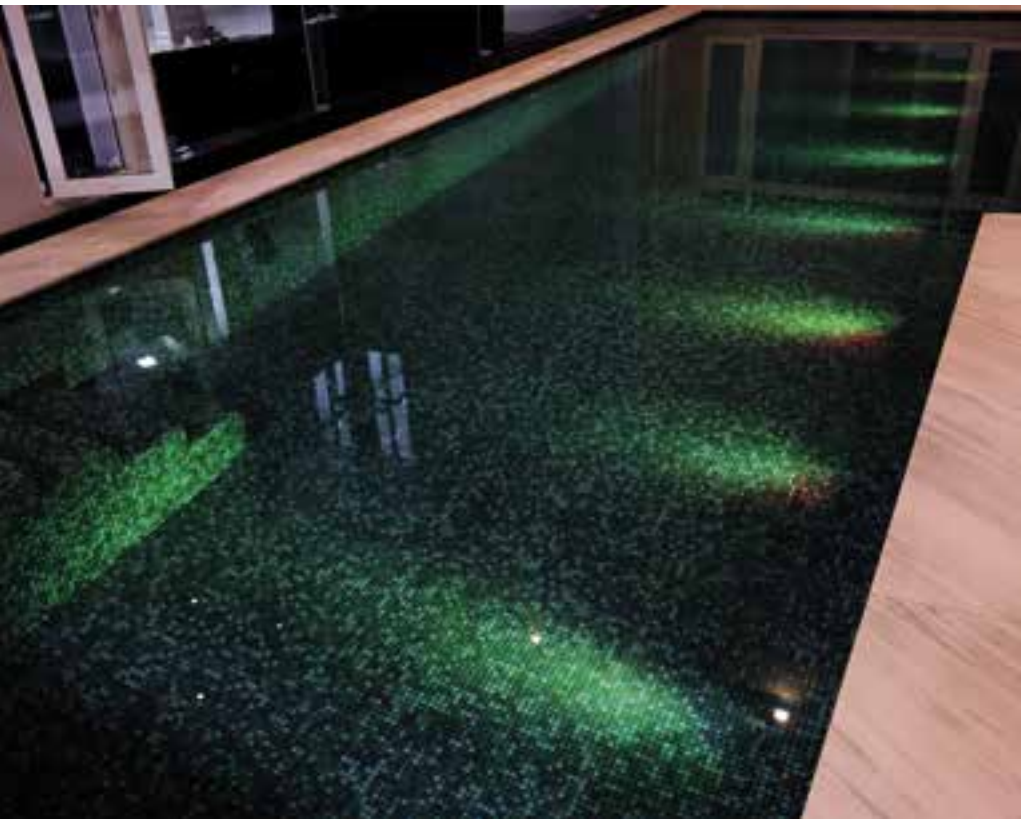

< Project
Privat Villa, Medan, Indonesia
Planner: Sinar Teknik

Power supplies Technical details see from page 234.

5.0635.65.03	Constant Current power supply, max 3 spotlights	5.0635.65.10	Constant Current power supply, max 6 spotlights
5.0635.65.03		5.0635.65.10	
5.0635.65.03		5.0635.65.10	
5.0635.65.03		5.0635.65.10	
5.0635.09.16	RGB-Controller, max 4 spotlights	5.0635.09.24	RGB-Controller, max 8 spotlights

NOTE

SOLE SALINE — SALINE version possible - Article number with additional „S" at the end

Spotlight with special cover ø 74 mm using installation housing with pressure flange

POW-LED, series-connected

OPTIONS

Possible beam angle POW-LED

10° | 30° | 45° | 90° | 15x40°

POW-LED monochrome, single colour in green, red, amber, turquoise

Homogeneous diffuse light distribution for accentuation on request.

RECESSED SPOTLIGHT
4.0171

UNDERWATER | IP68

- Compact spotlight for variable use
- Up to 1830 lumen light intensity
- Perfect for effective illumination of swimming pools

4.0171 | RECESSED-SPOTLIGHT

FOR ILLUMINATING AND ACCENTUATING SMALLER SWIMMING POOLS, JACUZZIS AND WATER BODIES.

IP68 | STAINLESS STEEL V4A 1.4571 316Ti | ELECTRO POLISHED | POW-LED INCL. | 3.000 K 4.500 K 6.000 K BLUE | RGB RGB-W | DYNAMIC WHITE | CONSTANT CURRENT KONSTANT STROM | DALI 1-10 V OPTIONAL DIMM | CABLE INCL. | max 5m

NEW VERSIONS

· Protection class IP68 – up to 5m water depth
· Entirely made of stainless steel 316Ti
· Round attachment cover, made of stainless steel 316Ti, height 3 mm
...
· POW-LED cold white, warm white, neutral white
· POW-LED blue
· Multichip POW-LED RGB
· NEW: Multichip POW-LED RGB-W
· NEW: Multichip POW-LED Dynamic white
· operating mode: constant current
· halogene QR-CB51 ES 12 V-AC
· Rotationally symmetric light distribution
...
· Cable gland M16x1,5
· Constant-current power source/RGB controller/external transformer
· Installation housing made of stainless steel 316Ti with 1.5 m cable protection tube and connection socket (order separately)
· Supplied with lamp and 3 m of underwater cable

ADDITIONAL PARTS

TIPP

glass disc, frosted
for softer light distribution (light loss approx. -15%)
50.4.00012.746

anti-glare louver
black, for 3 POW-LED and halogene
4.0071.00.50

anti-glare louver
black, for 6 POW-LED
4.0071.01.50

DYNAMIC WHITE

Control unit
Touch Control for dynamic white, DMX
5.0690.09.80

PRODUCT LINE

4.0071
Recessed spotlights (exterior)
> Page 170

4.0072
Surface spotlights
> Page 122

< Project
Private Farmhouse, Pune, India
Lighting designer: LVI Pune; Project partner: Light Alive, Mumbai

RECESSED SPOTLIGHT 4.0171

UNDERWATER | IP68

Installation housing

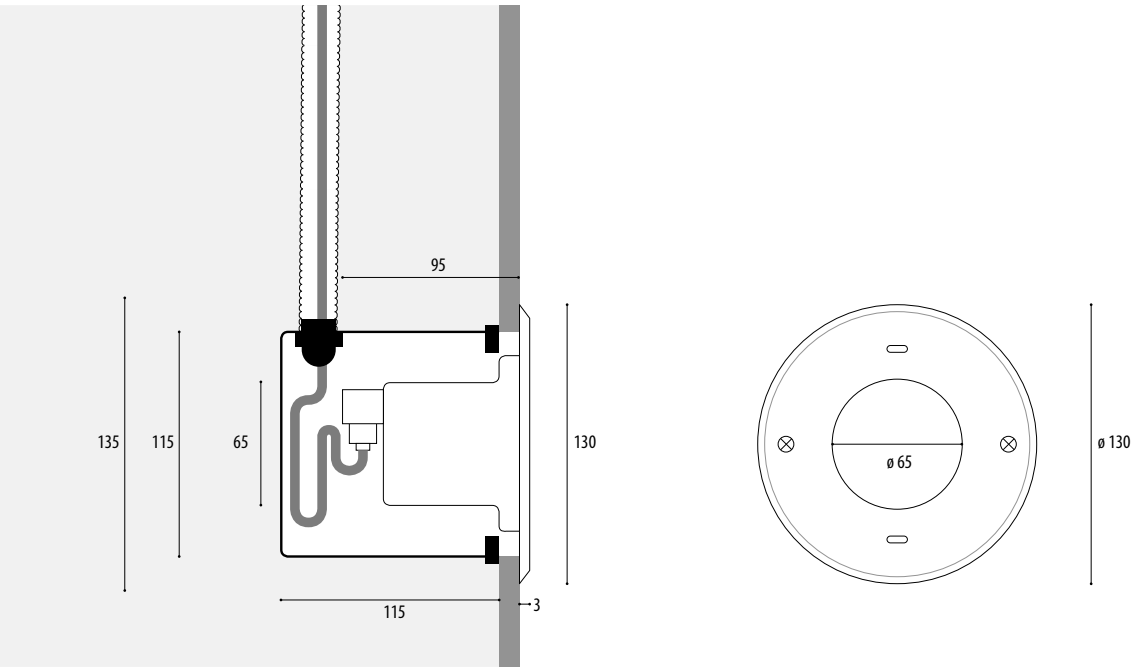

Article number	Lamps	Lumen	Light colour	Wattage	Current	Radation angle	Cable, installs	[V]
VERSIONS: ONLY UNDERWATER OPERATION								
POW-LED, RADATION ANGLE SPOT								
4.0171.20.01	3 POW-LED	915 lm	6000K cold white	total 9 W	CC 700 mA	10° spot	UW, 2x1,5 qmm	W61
4.0171.20.02	3 POW-LED	750 lm	3000K warm white	total 9 W	CC 700 mA	10° spot	UW, 2x1,5 qmm	
4.0171.20.03	3 POW-LED	855 lm	4500K neutral white	total 9 W	CC 700 mA	10° spot	UW, 2x1,5 qmm	
4.0171.20.06	3 POW-LED	630 mW/LED	blue	total 9 W	CC 700 mA	10° spot	UW, 2x1,5 qmm	
4.0171.20.09	3 Multichip POW-LED		RGB	all on 28 W	CC 700 mA	10° spot	UW, 6x0,5 qmm	
4.0171.20.21	6 POW-LED	1830 lm	6000K cold white	total 17 W	CC 1400 mA	10° spot	UW, 2x1,5 qmm	W11
4.0171.20.22	6 POW-LED	1500 lm	3000K warm white	total 17 W	CC 1400 mA	10° spot	UW, 2x1,5 qmm	
4.0171.20.23	6 POW-LED	1710 lm	4500K neutral white	total 17 W	CC 1400 mA	10° spot	UW, 2x1,5 qmm	
POW-LED, RADATION ANGLE MEDIUM								
4.0171.20.11	3 POW-LED	915 lm	6000K cold white	total 9 W	CC 700 mA	30° medium	UW, 2x1,5 qmm	W33
4.0171.20.12	3 POW-LED	750 lm	3000K warm white	total 9 W	CC 700 mA	30° medium	UW, 2x1,5 qmm	
4.0171.20.13	3 POW-LED	855 lm	4500K neutral white	total 9 W	CC 700 mA	30° medium	UW, 2x1,5 qmm	
4.0171.20.16	3 POW-LED	630 mW/LED	blue	total 9 W	CC 700 mA	30° medium	UW, 2x1,5 qmm	
4.0171.20.19	3 Multichip POW-LED		RGB	all on 28 W	CC 700 mA	45° medium	UW, 6x0,5 qmm	
4.0171.20.31	6 POW-LED	1830 lm	6000K cold white	total 17 W	CC 1400 mA	30° medium	UW, 2x1,5 qmm	W12
4.0171.20.32	6 POW-LED	1500 lm	3000K warm white	total 17 W	CC 1400 mA	30° medium	UW, 2x1,5 qmm	
4.0171.20.33	6 POW-LED	1710 lm	4500K neutral white	total 17 W	CC 1400 mA	30° medium	UW, 2x1,5 qmm	
NEW **4.0171.20.43**	1 Multichip POW-LED	neutral white: 140 lm	RGB-NW neutral white 4500K	all on 4 W	CC 350 mA	35° medium	UW, 8x0,5 qmm	
4.0171.20.80	1 Multichip POW-LED		3000K-6000K dynamic white	all on 4 W	CC 350 mA	35° medium	UW, 8x0,5 qmm	
HALOGEN								
4.0171.20.20	QR-CBC51 (IRC)	300	3000K	20W	12V-AC	36°	UW, 2x1,5 qmm	C63
4.0171.20.35	QR-CBC51 (IRC)	620	3000K	35W	12V-AC	36°	UW, 2x1,5 qmm	C73
4.0171.20.50	QR-CBC51 (IRC)	870	3000K	50W	12V-AC	36°	UW, 2x1,5 qmm	C83

INSTALLATION HOUSING

4.0171.01.00	made of V4A stainless steel with 1.5 m protective cable tube and M20 plastic terminating connection, for welding into stainless steel pools and for installation in concrete pools with tile covering
4.0171.02.00	made of V4A stainless steel with 1.5m protective cable tube and M20 plastic terminating connection, for installation in thin-walled pools and foil lined pools (pressure flange ø 137 mm)
4.0171.03.00	made of V4A stainless steel with 1.5 m protective cable tube and M20 plastic terminating connection, for installation in pools with adhesive/foil coating (adhesive flange ø 215 mm)

IP68 UNDERWATER

Power supplies Technical details see from page 234.

5.0670.65.10	Constant Current power supply, max 1 spotlights	5.0670.65.20	Constant Current power supply, max 2 spotlights
5.0670.65.10		5.0670.65.20	
5.0670.65.10		5.0670.65.20	
5.0670.65.10		5.0670.65.20	
5.0670.09.18	RGB-Controller, max 2 spotlights		
5.0670.00.06	Constant Current power supply, max 1 spotlights		
5.0670.00.06			
5.0670.00.06			

5.0670.65.10	Constant Current power supply, max 1 spotlights	5.0670.65.20	Constant Current power supply, max 2 spotlights
5.0670.65.10		5.0670.65.20	
5.0670.65.10		5.0670.65.20	
5.0670.65.10		5.0670.65.20	
5.0670.09.18	RGB-Controller, max 2 spotlights		
5.0670.00.06	Constant Current power supply, max 1 spotlights		
5.0670.00.06			
5.0670.00.06			
5.0635.09.52	RGB-W-Controller, max 12 spotlights		
5.0635.09.52			

5.0098.00.00	Transformer, max 2 spotlights	5.0101.00.00	Transformer, max 7 spotlights
5.0098.00.00	Transformer, max 1 spotlights	5.0101.00.00	Transformer, max 4 spotlights
5.0098.00.00	Transformer, max 1 spotlights	5.0101.00.00	Transformer, max 3 spotlights

NOTE

SOLE SALINE — SALINE version possible - Article number with additional „S" at the end

3 POW-LED and halogen unit rotatable and +/-15° adjustable

POW-LED, series-connected

OPTIONS

Possible beam angle POW-LED

10° 30° 45° 90° 15x40°

Possible beam angle HALOGENE

10° 24° 36° 60°

POW-LED monochrome, single colour in green, red, amber, turquoise

Version with square cover

RECESSED SPOTLIGHT 4.0087

UNDERWATER | IP68

Installation housing

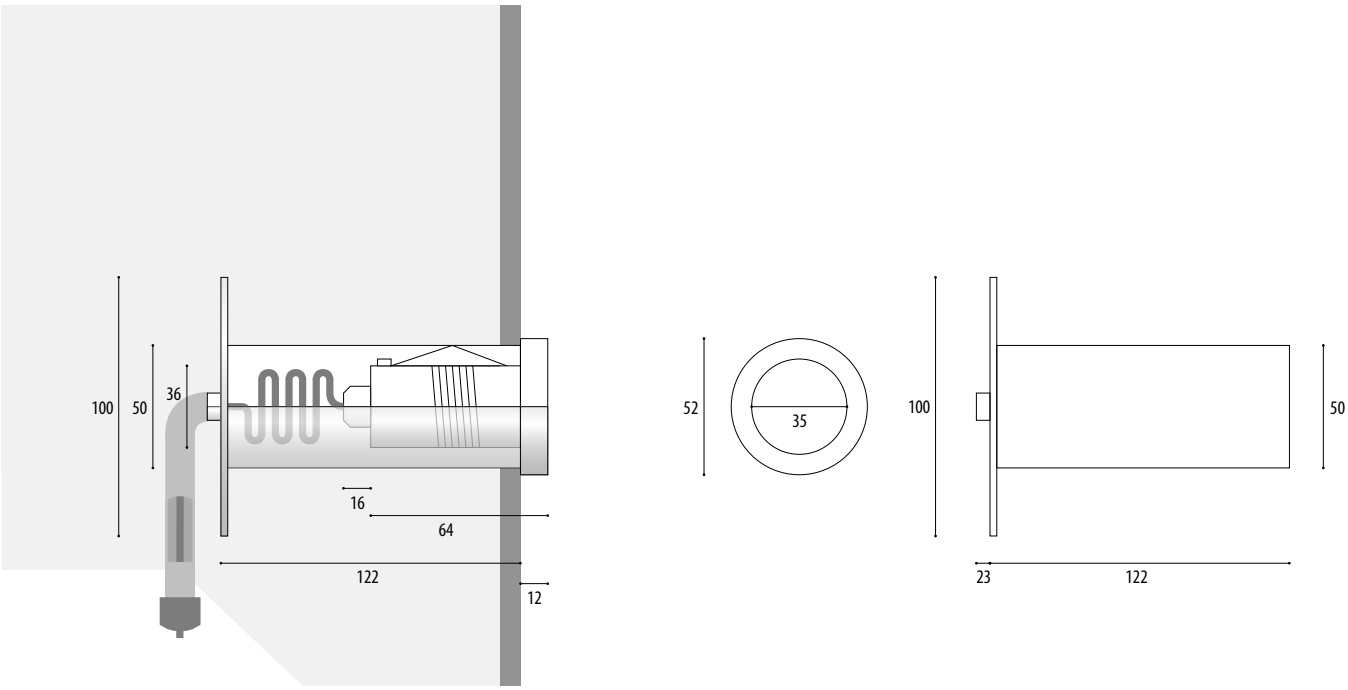

Article number	Lamps	Lumen	Light colour	Wattage	Current	Socket	Radation angle	Cable, installs	[V]
VERSIONS: ONLY UNDERWATER OPERATION									
HALOGEN									
4.0087.00.35	QR-CBC35	430	3000K	35W	12V-AC	GU4	36°	Si, 2x1,5 qmm	C15
VERSIONS: UNDER- AND OVERWATER OPERATION (ACCORDING TO PRIOR AGREEMENT)									
POW-LED									
4.0087.00.01	1 POW-LED	165 lm	6000K cold white	total 2 W	CC 350 mA		10° spot	UW, 2x1,5 qmm	V12
4.0087.00.02	1 POW-LED	100 lm	3000K warm white	total 2 W	CC 350 mA		10° spot	UW, 2x1,5 qmm	
4.0087.00.03	1 POW-LED	110 lm	4500K neutral white	total 2 W	CC 350 mA		10° spot	UW, 2x1,5 qmm	
4.0087.00.04	1 POW-LED		yellow	total 2 W	CC 350 mA		10° spot	UW, 2x1,5 qmm	
4.0087.00.05	1 POW-LED		red	total 2 W	CC 350 mA		10° spot	UW, 2x1,5 qmm	
4.0087.00.06	1 POW-LED		blue	total 2 W	CC 350 mA		10° spot	UW, 2x1,5 qmm	
4.0087.00.07	1 POW-LED		green	total 2 W	CC 350 mA		10° spot	UW, 2x1,5 qmm	
HALOGEN									
4.0087.00.20	QR-CBC35	210		20W	12V-AC	GU4	36°	Si, 2x1,5 qmm	C13
INSTALLATION HOUSING									
4.0089.00.00	Installation housing out of 316L stainless steel with 1.5m cable protection tube and terminating cable gland (M20 plastic)								

4.0087 | RECESSED-SPOTLIGHT

FOR ACCENTUATION IN SMALL POOLS AND WHIRLPOOLS.

IP68 | STAINLESS STEEL V4A 1.4571 316Ti | POW-LED INCL. | 3.000 K 4.500 K 6.000 K COLOR | CONSTANT CURRENT KONSTANT STROM | CABLE INCL.

· Protection class IP68 – up to 10 m water depth
· Entirely made of stainless steel 316Ti 1.4571
...
· POW-LED cold white, warm white, neutral white
· POW-LED clored
· operating mode: constant current
· low voltage halogen QR-CB35 12 V-AC
...
· For concrete pools, in walls or steps with an installation housing (4.0089, not included)
· Cable gland PG9, marine grade 316L stainless steel
· Supplied with light source and UW-cable (3 m) already connected

Power supplies Technical details see from page 234.

5.0098.00.00	Transformer, max 1 spotlights		
5.0635.65.03	Constant Current power supply, max 3 spotlights	**5.0635.65.10**	Constant Current power supply, max 6 spotlights
5.0635.65.03		**5.0635.65.10**	
5.0635.65.03		**5.0635.65.10**	
5.0635.65.03		**5.0635.65.10**	
5.0635.65.03		**5.0635.65.10**	
5.0635.65.03		**5.0635.65.10**	
5.0635.65.03		**5.0635.65.10**	
5.0098.00.00	Transformer, max 2 spotlights		

NOTE

Please order the installation housing (4.0089) separately

POW-LED, series-connected

OPTIONS

Possible beam angle POW-LED

10° | 30° | 45° | 90° | 15x40°

RGB — POW-LED RGB available

White cover on request

RECESSED SPOTLIGHT 4.0088

UNDERWATER | IP68

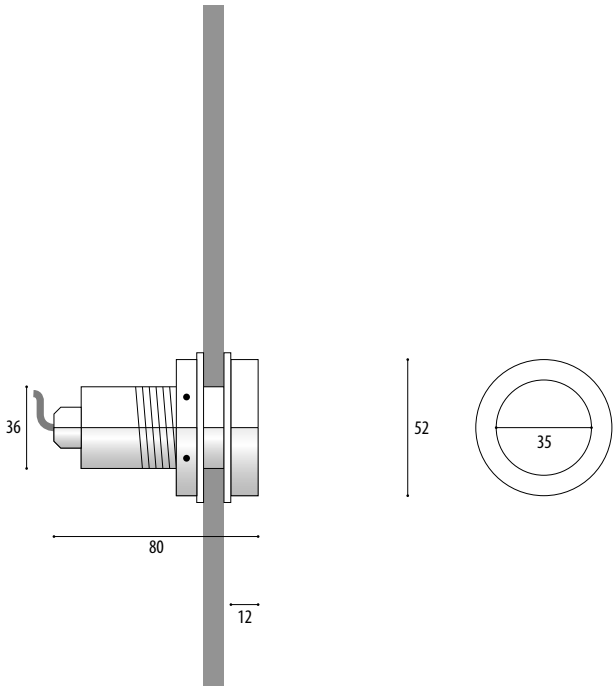

Article number	Lamps	Lumen	Light colour	Wattage	Current	Socket	Radation angle	Cable, installs	[V]
VERSIONS: ONLY UNDERWATER OPERATION									
HALOGEN									
4.0088.00.35	QR-CBC35	430	3000K	35W	12V-AC	GU4	36°	Si, 2x1,5 qmm	C15
VERSIONS: UNDER- AND OVERWATER OPERATION (ACCORDING TO PRIOR AGREEMENT)									
POW-LED									
4.0088.00.01	1 POW-LED	165 lm	6000K cold white	total 2 W	CC 350 mA		10° spot	UW, 2x1,5 qmm	V12
4.0088.00.02	1 POW-LED	100 lm	3000K warm white	total 2 W	CC 350 mA		10° spot	UW, 2x1,5 qmm	
4.0088.00.03	1 POW-LED	110 lm	4500K neutral white	total 2 W	CC 350 mA		10° spot	UW, 2x1,5 qmm	
4.0088.00.04	1 POW-LED		yellow	total 2 W	CC 350 mA		10° spot	UW, 2x1,5 qmm	
4.0088.00.05	1 POW-LED		red	total 2 W	CC 350 mA		10° spot	UW, 2x1,5 qmm	
4.0088.00.06	1 POW-LED		blue	total 2 W	CC 350 mA		10° spot	UW, 2x1,5 qmm	
4.0088.00.07	1 POW-LED		green	total 2 W	CC 350 mA		10° spot	UW, 2x1,5 qmm	
HALOGEN									
4.0088.00.20	QR-CBC35	210	3000K	20W	12V-AC	GU4	36°	Si, 2x1,5 qmm	C13

4.0088 | RECESSED-SPOTLIGHT

FOR ILLUMINATING AND ACCENTUATING SMALLER THIN WALLED SWIMMING POOLS AND JACUZZIS.

IP68 | STAINLESS STEEL V4A 1.4571 316Ti | POW-LED INCL. | 3.000 K 4.500 K 6.000 K COLOR | CONSTANT CURRENT KONSTANT STROM | CABLE INCL. | III

· Protection class IP68 – up to 10 m water depth
· Entirely made of stainless steel 316Ti 1.4571
...
· POW-LED cold white, warm white, neutral white
· POW-LED clored
· operating mode: constant current
· low voltage halogen QR-CB35 12 V-AC
...
· With screw-type flange for pre-fabricated pools or containers
· Cable gland PG9, marine grade 316L stainless steel
· Supplied with light source and UW-cable (3 m) already connected

Power supplies Technical details see from page 234.

5.0098.00.00	Transformer, max 1 spotlights		
5.0635.65.03	Constant Current power supply, max 3 spotlights	5.0635.65.10	Constant Current power supply, max 6 spotlights
5.0635.65.03		5.0635.65.10	
5.0635.65.03		5.0635.65.10	
5.0635.65.03		5.0635.65.10	
5.0635.65.03		5.0635.65.10	
5.0635.65.03		5.0635.65.10	
5.0635.65.03		5.0635.65.10	
5.0098.00.00	Transformer, max 2 spotlights		

NOTE

POW-LED, series-connected

OPTIONS

Possible beam angle POW-LED

10° | 30° | 45° | 90° | 15x40°

RGB — POW-LED RGB available

White cover on request

RECESSED SPOTLIGHT 4.0080

UNDERWATER | IP68

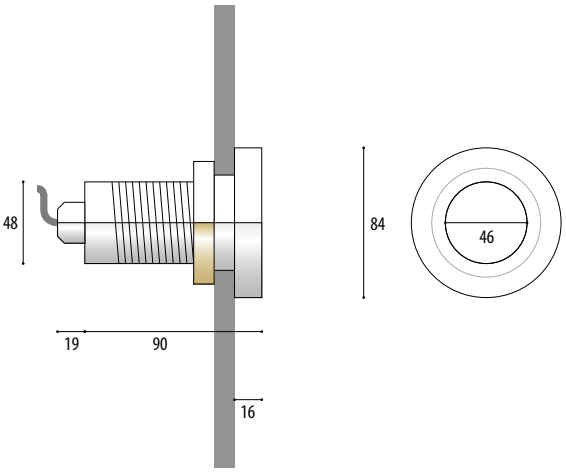

Article number	Lamps	Lumen	Light colour	Wattage	Current	Socket	Radation angle	Cable, installs	[V]
VERSIONS: ONLY UNDERWATER OPERATION									
POW-LED									
4.0080.00.11	3 POW-LED	915 lm	6000K cold white	total 9 W	CC 700 mA		30° medium	UW, 2x1,5 qmm	W33
4.0080.00.12	3 POW-LED	750 lm	3000K warm white	total 9 W	CC 700 mA		30° medium	UW, 2x1,5 qmm	W33
4.0080.00.13	3 POW-LED	855 lm	4500K neutral white	total 9 W	CC 700 mA		30° medium	UW, 2x1,5 qmm	
HALOGEN									
4.0080.00.35	QR-CBC51	430	3000K	35W	12V-AC	GU5,3	36°	Si, 2x1,5 qmm	C33
4.0080.00.50	QR-CBC51	680	3000K	50W	12V-AC	GU5,3	36°	Si, 2x1,5 qmm	C43
VERSIONS: UNDER- AND OVERWATER OPERATION (ACCORDING TO PRIOR AGREEMENT)									
POW-LED									
4.0080.00.14	3 POW-LED		yellow	total 5 W	CC 350 mA		30° medium	UW, 2x1,5 qmm	
4.0080.00.15	3 POW-LED		red	total 5 W	CC 350 mA		30° medium	UW, 2x1,5 qmm	
4.0080.00.16	3 POW-LED		blue	total 5 W	CC 350 mA		30° medium	UW, 2x1,5 qmm	
4.0080.00.17	3 POW-LED		green	total 5 W	CC 350 mA		30° medium	UW, 2x1,5 qmm	
4.0080.00.19	3 POW-LED		RGB	all on 5 W	CC 350 mA		30° medium	Si, 6x0,5 qmm	
HALOGEN									
4.0080.00.20	QR-CBC51	210	3000K	20W	12V-AC	GU5,3	36°	Si, 2x1,5 qmm	C22

4.0080 | RECESSED SPOTLIGHT

FOR ILLUMINATING AND ACCENTUATING SMALLER THIN WALLED SWIMMING POOLS AND JACUZZIS.

IP68 | STAINLESS STEEL V4A 1.4571 316Ti | POW-LED INCL. | 3.000 K 4.500 K 6.000 K COLOR | CONSTANT CURRENT KONSTANT STROM | CABLE INCL.

· Protection class IP68 – up to 10 m water depth
· Entirely made of stainless steel 316Ti 1.4571
...
· POW-LED cold white, warm white, neutral white
· POW-LED clored
· POW-LED RGB
· operating mode: constant current
· low voltage halogen QR-CB51 ES 12 V-AC
...
· With screw-type flange for pre-fabricated pools or containers
· Cable gland PG11, marine grade 316Ti stainless steel
· Supplied with light source and cable (3 m) already connected

Power supplies Technical details see from page 234.

5.0670.65.10	Constant Current power supply, max 1 spotlights	5.0670.65.20	Constant Current power supply, max 2 spotlights
5.0670.65.10		5.0670.65.20	
5.0670.65.10		5.0670.65.20	
5.0098.00.00	Transformer, max 1 spotlights		
5.0098.00.00	Transformer, max 1 spotlights		

5.0635.65.03	Constant Current power supply, max 1 spotlights	5.0635.65.10	Constant Current power supply, max 2 spotlights
5.0635.65.03		5.0635.65.10	
5.0635.65.03		5.0635.65.10	
5.0635.65.03		5.0635.65.10	
5.0635.09.16	RGB-Controller, max 4 spotlights	5.0635.09.24	RGB-Controller, max 6 spotlights
5.0098.00.00	Transformer, max 2 spotlights		

NOTE

POW-LED, series-connected

OPTIONS

Possible beam angle POW-LED

10° | 30° | 45° | 90° | 15x40°

Possible beam angle HALOGENE

10° | 24° | 36° | 60°

RECESSED SPOTLIGHT 4.0083

UNDERWATER IP68

Installation housing

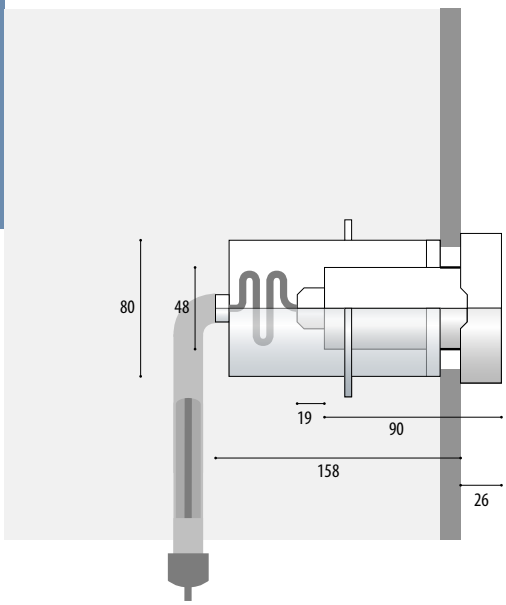

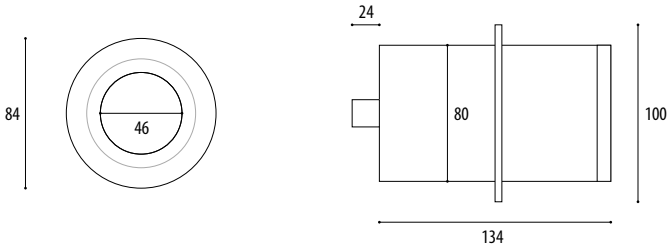

Article number	Lamps	Lumen	Light colour	Wattage	Current	Socket	Radation angle	Cable, installs	[V]
VERSIONS: ONLY UNDERWATER OPERATION									
POW-LED									
4.0083.00.11	3 POW-LED	915 lm	6000K cold white	total 9 W	CC 700 mA		30° medium	UW, 2x1,5 qmm	W33
4.0083.00.12	3 POW-LED	750 lm	3000K warm white	total 9 W	CC 700 mA		30° medium	UW, 2x1,5 qmm	W33
4.0083.00.13	3 POW-LED	855 lm	4500K neutral white	total 9 W	CC 700 mA		30° medium	UW, 2x1,5 qmm	
4.0083.00.39	3 POW-LED		RGB	all on 9 W	CC 700 mA		30° medium	Si, 6x0,5 qmm	
HALOGEN									
4.0083.00.35	QR-CBC51	430	3000K	35W	12V-AC	GU5,3	36°	Si, 2x1,5 qmm	C33
4.0083.00.50	QR-CBC51	680	3000K	50W	12V-AC	GU5,3	36°	Si, 2x1,5 qmm	C43
VERSIONS: UNDER- AND OVERWATER OPERATION (ACCORDING TO PRIOR AGREEMENT)									
POW-LED									
4.0083.00.14	3 POW-LED		yellow	total 5 W	CC 350 mA		30° medium	UW, 2x1,5 qmm	
4.0083.00.15	3 POW-LED		red	total 5 W	CC 350 mA		30° medium	UW, 2x1,5 qmm	
4.0083.00.16	3 POW-LED		blue	total 5 W	CC 350 mA		30° medium	UW, 2x1,5 qmm	
4.0083.00.17	3 POW-LED		green	total 5 W	CC 350 mA		30° medium	UW, 2x1,5 qmm	
4.0083.00.19	3 POW-LED		RGB	all on 5 W	CC 350 mA		30° medium	Si, 6x0,5 qmm	
HALOGEN									
4.0083.00.20	QR-CBC51	210	3000K	20W	12V-AC	GU5,3	36°	Si, 2x1,5 qmm	C22
INSTALLATION HOUSING									
4.0084.00.00	Installation housing out of 316L stainless steel with 1.5m cable protection tube and terminating cable gland (M20 plastic)								

4.0083 | RECESSED SPOTLIGHT

FOR ILLUMINATING AND ACCENTUATING SMALLER SWIMMING POOLS, JACUZZIS AND WATER BODIES.

CENTUM°° Updated version available: 4.0102 – Page 30

IP68 | STAINLESS STEEL V4A 1.4571 316Ti | POW-LED INCL. | 3.000 K 4.500 K 6.000 K COLOR | CONSTANT CURRENT KONSTANT STROM | CABLE INCL.

· Protection class IP68 – up to 10 m water depth
· Entirely made of stainless steel 316Ti 1.4571
...
· POW-LED cold white, warm white, neutral white
· POW-LED clored
· POW-LED RGB
· operating mode: constant current
· low voltage halogen QR-CB51 ES 12 V-AC
...
· For installation in concrete in conjunction with an installation housing (4.0084, not included)
· Cable gland PG11, marine grade 316L stainless steel
· Supplied with light source and cable (3 m) already connected

ADDITIONAL PARTS

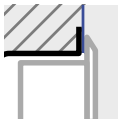

gluing flange
ø 150 mm
4.0084.55.55

Power supplies — Technical details see from page 234.

5.0670.65.10	Constant Current power supply, max 1 spotlights	**5.0670.65.20**	Constant Current power supply, max 2 spotlights
5.0670.65.10		**5.0670.65.20**	
5.0670.65.10		**5.0670.65.20**	
5.0670.09.18	RGB-Controller, max 6 spotlights		
5.0098.00.00	Transformer, max 1 spotlights		
5.0098.00.00	Transformer, max 1 spotlights		

5.0635.65.03	Constant Current power supply, max 1 spotlights	**5.0635.65.10**	Constant Current power supply, max 2 spotlights
5.0635.65.03		**5.0635.65.10**	
5.0635.65.03		**5.0635.65.10**	
5.0635.65.03		**5.0635.65.10**	
5.0635.09.16	RGB-Controller, max 4 spotlights	**5.0635.09.24**	RGB-Controller, max 6 spotlights
5.0098.00.00	Transformer, max 2 spotlights		

NOTE

An installation housing is required for a new installation. Please order separately.

POW-LED, series-connected

OPTIONS

Possible beam angle POW-LED

10° | 30° | 45° | 90° | 15x40°

Possible beam angle HALOGENE

10° | 24° | 36° | 60°

RECESSED SPOTLIGHT 4.0093

UNDERWATER | IP68

Installation housing

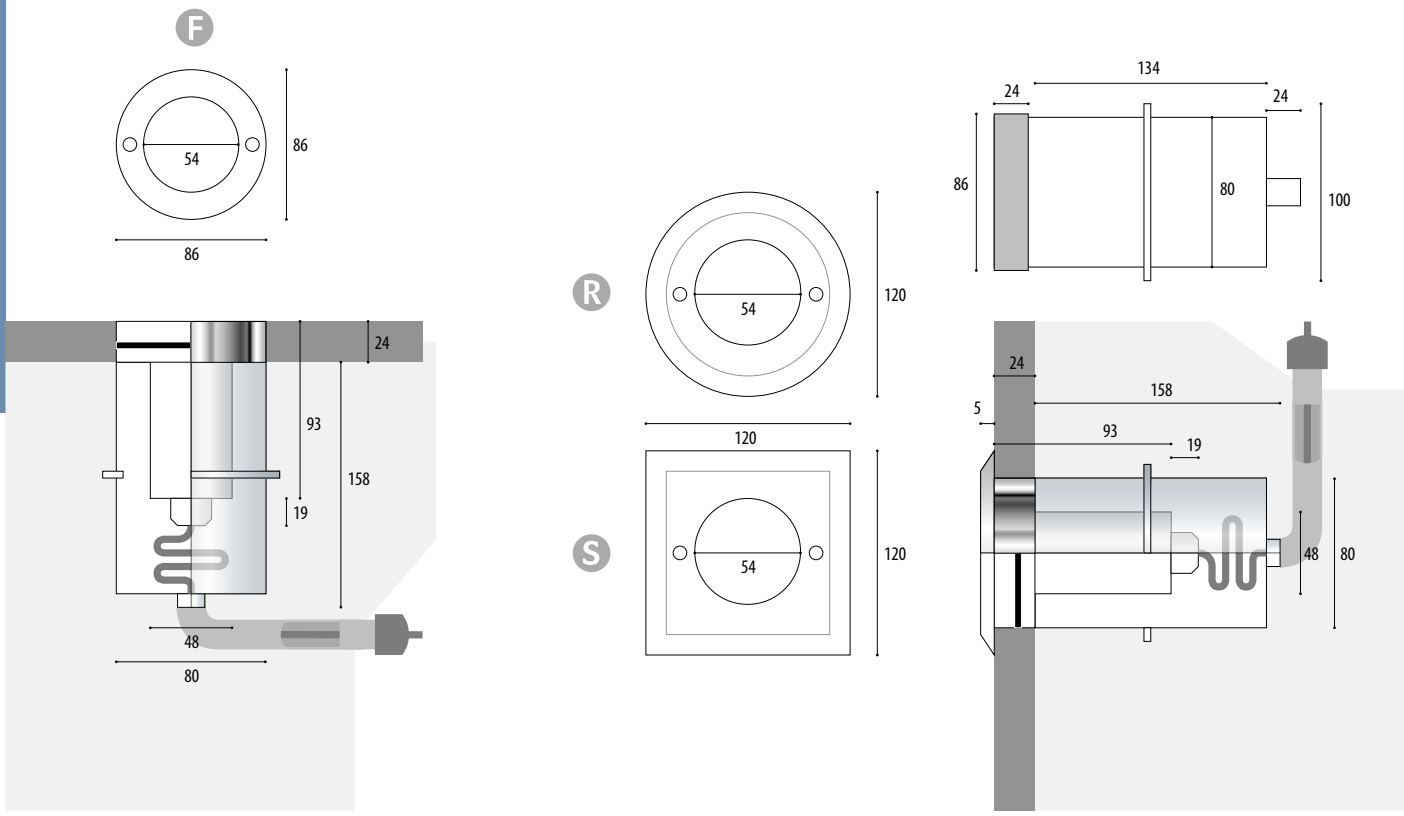

F Article number	R Article number	S Article number	Lamps	Lumen	Light colour	Wattage	Current	Socket	Radation angle	Cable, installs	[V]
VERSIONS: ONLY UNDERWATER OPERATION											
POW-LED											
4.0093.10.11	**4.0093.20.11**	**4.0093.40.11**	3 POW-LED	915 lm	6000K cold white	total 9 W	CC 700 mA		30° medium	UW, 2x1,5 qmm	W33
4.0093.10.12	**4.0093.20.12**	**4.0093.40.12**	3 POW-LED	750 lm	3000K warm white	total 9 W	CC 700 mA		30° medium	UW, 2x1,5 qmm	W33
4.0093.10.13	**4.0093.20.13**	**4.0093.40.13**	3 POW-LED	855 lm	4500K neutral white	total 9 W	CC 700 mA		30° medium	UW, 2x1,5 qmm	
4.0093.10.39	**4.0093.20.39**	**4.0093.40.39**	3 POW-LED		RGB	all on 9 W	CC 700 mA		30° medium	Si, 6x0,5 qmm	
HALOGEN											
4.0093.10.35	**4.0093.20.35**	**4.0093.40.35**	QR-CBC51 (IRC)	620	3000K	35W	12V-AC	GU 5,3	36°	Si, 2x1,5 qmm	C73
VERSIONS: UNDER- AND OVERWATER OPERATION (ACCORDING TO PRIOR AGREEMENT)											
POW-LED											
4.0093.10.14	**4.0093.20.14**	**4.0093.40.14**	3 POW-LED		yellow	total 5 W	CC 350 mA		30° medium	UW, 2x1,5 qmm	
4.0093.10.15	**4.0093.20.15**	**4.0093.40.15**	3 POW-LED		red	total 5 W	CC 350 mA		30° medium	UW, 2x1,5 qmm	
4.0093.10.16	**4.0093.20.16**	**4.0093.40.16**	3 POW-LED		blue	total 5 W	CC 350 mA		30° medium	UW, 2x1,5 qmm	
4.0093.10.17	**4.0093.20.17**	**4.0093.40.17**	3 POW-LED		green	total 5 W	CC 350 mA		30° medium	UW, 2x1,5 qmm	
4.0093.10.19	**4.0093.20.19**	**4.0093.40.19**	3 POW-LED		RGB	all on 5 W	CC 350 mA		30° medium	Si, 6x0,5 qmm	
HALOGEN											
4.0093.10.20	**4.0093.20.20**	**4.0093.40.20**	QR-CBC51 (IRC)	300	3000K	20W	12V-AC	GU5,3	36°	Si, 2x1,5 qmm	C63

CIRCULAR COVER

4.0094.00.00 Installation housing out of 316L stainless steel with 1.5m cable protection tube and terminating cable gland (M20 plastic)

4.0093 | RECESSED SPOTLIGHT

FOR ILLUMINATING AND ACCENTUATING SMALLER SWIMMING POOLS, JACUZZIS AND WATER BODIES.

CENTUM°° Updated version available: 4.0102 – Page 30

IP68 | STAINLESS STEEL V4A 1.4571 316Ti | POW-LED INCL. | 3.000 K 4.500 K 6.000 K COLOR | CONSTANT CURRENT KONSTANT STROM | CABLE INCL.

- Protection class IP68 – up to 10 m water depth
- Entirely made of stainless steel 316Ti 1.4571
- For flush-mounted installation or with a round or square cover

...

- POW-LED cold white, warm white, neutral white
- POW-LED clored
- POW-LED RGB
- operating mode: constant current
- low voltage halogen QR-CB51 ES 12 V-AC

...

- For installation in concrete walls and floors in conjunction with an installation housing (4.0094, not included)
- Cable gland PG11, marine grade 316L stainless steel
- Supplied with light source and cable (3 m) already connected

ADDITIONAL PARTS

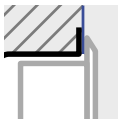

gluing flange
ø 150 mm
4.0094.55.55

Anti-skid coating

4.0093.02.00

Power supplies Technical details see from page 234.

5.0670.65.10	Constant Current power supply, max 1 spotlights	**5.0670.65.20**	Constant Current power supply, max 2 spotlights
5.0670.65.10		**5.0670.65.20**	
5.0670.65.10		**5.0670.65.20**	
5.0670.09.18	RGB-Controller, max 6 spotlights		
5.0098.00.00	Transformer, max 1 spotlights		

5.0635.65.03	Constant Current power supply, max 1 spotlights	**5.0635.65.10**	Constant Current power supply, max 2 spotlights
5.0635.65.03		**5.0635.65.10**	
5.0635.65.03		**5.0635.65.10**	
5.0635.65.03		**5.0635.65.10**	
5.0635.09.16	RGB-Controller, max 4 spotlights	**5.0635.09.24**	RGB-Controller, max 6 spotlights
5.0098.00.00	Transformer, max 2 spotlights		

NOTE

An installation housing is required for a new installation. Please order separately.

POW-LED, series-connected

OPTIONS

Possible beam angle POW-LED

10° | 30° | 45° | 90° | 15x40°

Possible beam angle HALOGENE

10° | 24° | 36° | 60°

RECESSED SPOTLIGHT 4.3061

UNDERWATER | IP68

- Linear illumination for swimming pools
- Up to 4140 lumen light intensity
- With swivelling LED unit

4.3061 | RECESSED LINEAR SPOTLIGHT

FOR ILLUMINATION AND ACCENT LIGHTING IN SWIMMING POOLS AND WATER ATTRACTIONS.

IP68 | STAINLESS STEEL V4A 1.4571 316Ti | ELECTRO POLISHED | POW-LED INCL. | 3.000 K 4.500 K 6.000 K BLUE | RGB | CONSTANT CURRENT KONSTANT STROM | DALI 1-10 V OPTIONAL DIMM | CABLE INCL. | max 5m | 1.5t

· Protection class IP68 – up to 5m water depth
· Entirely made of stainless steel 316Ti 1.4571
· Rectangular cover, made of stainless steel 316Ti, height 5 mm
...
· POW-LED cold white, warm white, neutral white
· POW-LED blue
· POW-LED RGB
· operating mode: constant current

· rotation-symmetric light distribution
· temperature controlled (NTC)
· adjustable +/- 15°
...
· Constant-current power source/RGB Controller external
· Cable gland PG11, stainless steel 316Ti
· Installation housing made of stainless steel 316Ti with 1.5 m cable protection tube and connection socket (order separately)
· Supplied with lamp and 3m of underwater cable

PRODUCT LINE

4.3030
Recessed spotlights (exterior)
> Page 202

4.3060
Recessed spotlights (exterior)
> Page 204

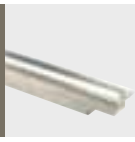

4.3090
Recessed spotlights (exterior)
> Page 210

4.3012
Recessed spotlights (exterior)
> Page 214

< Project
Parkhotel Vitznau, Switzerland

RECESSED SPOTLIGHT
4.3061

UNDERWATER

IP68

Installation housing

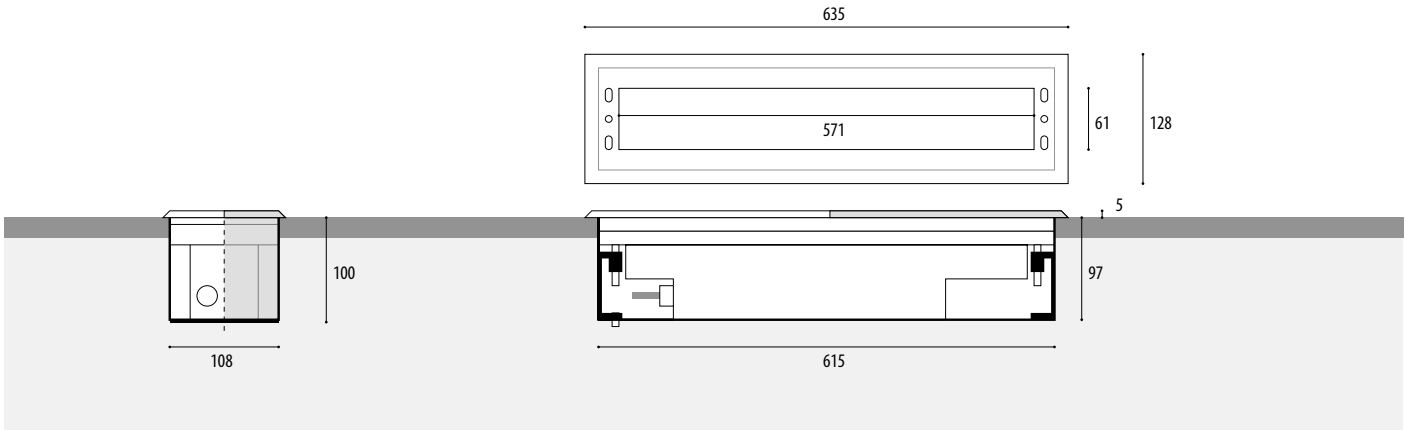

Article number	Lamps	Lumen	Light colour	Wattage	Current	Radation angle	Cable, installs
VERSIONS: ONLY UNDERWATER OPERATION							
POW-LED, RADATION ANGLE 30° (MEDIUM)							
4.3061.40.11	18 POW-LED	4140 lm	6000K cold white	total 48 W	CC 700 mA @24 V-DC	30° medium	UW, 8x0,5 qmm
4.3061.40.12	18 POW-LED	2700 lm	3000K warm white	total 48 W	CC 700 mA @24 V-DC	30° medium	UW, 8x0,5 qmm
4.3061.40.13	18 POW-LED	2880 lm	4500K neutral white	total 48 W	CC 700 mA @24 V-DC	30° medium	UW, 8x0,5 qmm
4.3061.40.16	18 POW-LED	610 mW/LED	royal blue	total 48 W	CC 700 mA @24 V-DC	30° medium	UW, 8x0,5 qmm
4.3061.40.19	18 POW-LED		RGB	all on 50 W	CC 700 mA @24 V-DC	30° medium	UW, 8x0,5 qmm

INSTALLATION HOUSING

4.3061.01.00	made of V4A stainless steel with 1.5m protective cable tube and M20 plastic terminating connection, for welding into stainless steel pools and for installation in concrete pools with tile covering

RECESSED SPOTLIGHT 4.3061

IP68 | UNDERWATER

< Project
Familienbad DeBaalje, Aurich, Germany
Photos: Frederick Schmidt

NOTE

Matching installation housing should be selected, depending on the installation type and situation.

OPTIONS

Possible beam angle POW-LED

10° | 30° | 45° | 90° | 15x40°

POW-LED monochrome, single colour in green, red, amber, turquoise

Installation housing for other pool types or flush cover version on request.

Variant as surface-mounted spotlight available (tiltable from 180 °)

Power supplies	Technical details see from page 234.
5.0670.00.18	
5.0670.00.18	Constant Current power supply, max 1 spotlights
5.0670.00.18	
5.0670.00.18	
5.0670.09.18	RGB-Controller, max 1 spotlights

A-M

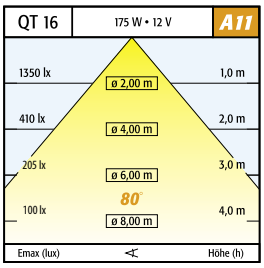
QT 16
175 W • 12 V
A11
1350 lx
ø 2,00 m
1,0 m
410 lx
ø 4,00 m
2,0 m
205 lx
ø 6,00 m
3,0 m
100 lx
80°
ø 8,00 m
4,0 m
Emax (lux)
Höhe (h)

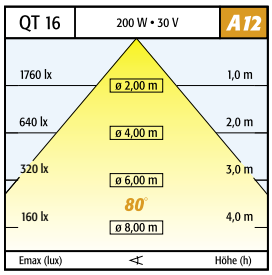
QT 16
200 W • 30 V
A12
1760 lx
ø 2,00 m
1,0 m
640 lx
ø 4,00 m
2,0 m
320 lx
ø 6,00 m
3,0 m
160 lx
80°
ø 8,00 m
4,0 m
Emax (lux)
Höhe (h)

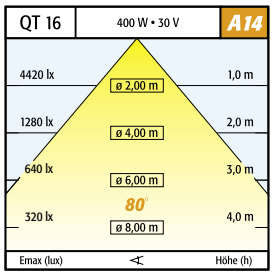
QT 16
400 W • 30 V
A14
4420 lx
ø 2,00 m
1,0 m
1280 lx
ø 4,00 m
2,0 m
640 lx
ø 6,00 m
3,0 m
320 lx
80°
ø 8,00 m
4,0 m
Emax (lux)
Höhe (h)

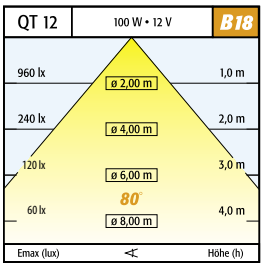
QT 12
100 W • 12 V
B18
960 lx
ø 2,00 m
1,0 m
240 lx
ø 4,00 m
2,0 m
120 lx
ø 6,00 m
3,0 m
60 lx
80°
ø 8,00 m
4,0 m
Emax (lux)
Höhe (h)

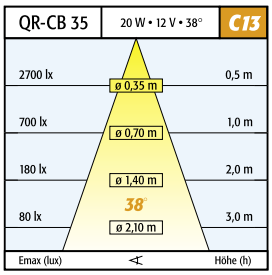
QR-CB 35
20 W • 12 V • 38°
C13
2700 lx
ø 0,35 m
0,5 m
700 lx
ø 0,70 m
1,0 m
180 lx
ø 1,40 m
2,0 m
80 lx
38°
ø 2,10 m
3,0 m
Emax (lux)
Höhe (h)

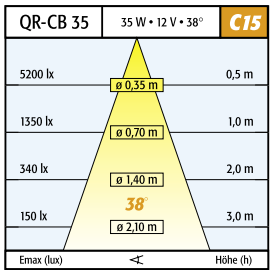
QR-CB 35
35 W • 12 V • 38°
C15
5200 lx
ø 0,35 m
0,5 m
1350 lx
ø 0,70 m
1,0 m
340 lx
ø 1,40 m
2,0 m
150 lx
38°
ø 2,10 m
3,0 m
Emax (lux)
Höhe (h)

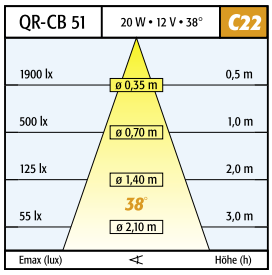
QR-CB 51
20 W • 12 V • 38°
C22
1900 lx
ø 0,35 m
0,5 m
500 lx
ø 0,70 m
1,0 m
125 lx
ø 1,40 m
2,0 m
55 lx
38°
ø 2,10 m
3,0 m
Emax (lux)
Höhe (h)

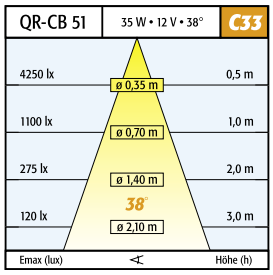
QR-CB 51
35 W • 12 V • 38°
C33
4250 lx
ø 0,35 m
0,5 m
1100 lx
ø 0,70 m
1,0 m
275 lx
ø 1,40 m
2,0 m
120 lx
38°
ø 2,10 m
3,0 m
Emax (lux)
Höhe (h)

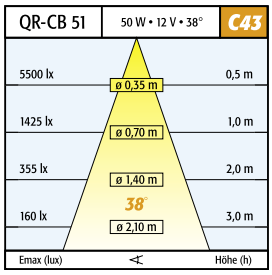
QR-CB 51
50 W • 12 V • 38°
C43
5500 lx
ø 0,35 m
0,5 m
1425 lx
ø 0,70 m
1,0 m
355 lx
ø 1,40 m
2,0 m
160 lx
38°
ø 2,10 m
3,0 m
Emax (lux)
Höhe (h)

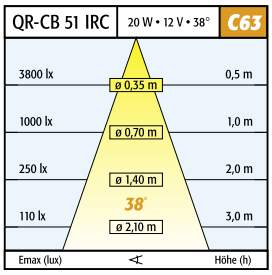
QR-CB 51 IRC
20 W • 12 V • 38°
C63
3800 lx
ø 0,35 m
0,5 m
1000 lx
ø 0,70 m
1,0 m
250 lx
ø 1,40 m
2,0 m
110 lx
38°
ø 2,10 m
3,0 m
Emax (lux)
Höhe (h)

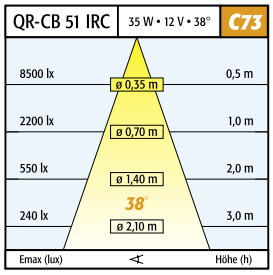
QR-CB 51 IRC
35 W • 12 V • 38°
C73
8500 lx
ø 0,35 m
0,5 m
2200 lx
ø 0,70 m
1,0 m
550 lx
ø 1,40 m
2,0 m
240 lx
38°
ø 2,10 m
3,0 m
Emax (lux)
Höhe (h)

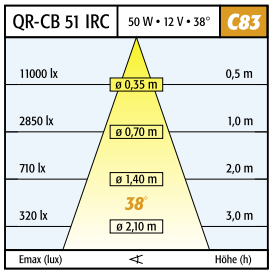
QR-CB 51 IRC
50 W • 12 V • 38°
C83
11000 lx
ø 0,35 m
0,5 m
2850 lx
ø 0,70 m
1,0 m
710 lx
ø 1,40 m
2,0 m
320 lx
38°
ø 2,10 m
3,0 m
Emax (lux)
Höhe (h)

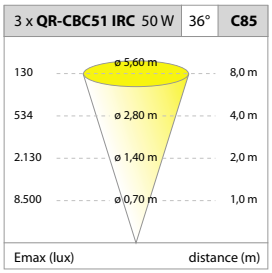
3 x QR-CBC51 IRC 50 W
36°
C85
130
ø 5,60 m
8,0 m
534
ø 2,80 m
4,0 m
2.130
ø 1,40 m
2,0 m
8.500
ø 0,70 m
1,0 m
Emax (lux)
distance (m)

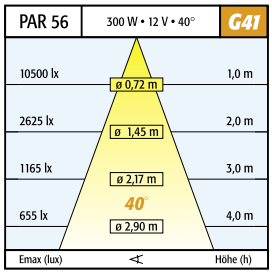
PAR 56
300 W • 12 V • 40°
G41
10500 lx
ø 0,72 m
1,0 m
2625 lx
ø 1,45 m
2,0 m
1165 lx
ø 2,17 m
3,0 m
655 lx
40°
ø 2,90 m
4,0 m
Emax (lux)
Höhe (h)

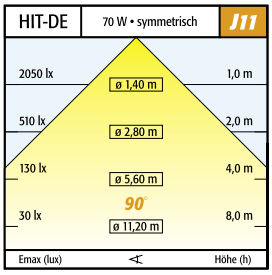
HIT-DE
70 W • symmetrisch
J11
2050 lx
ø 1,40 m
1,0 m
510 lx
ø 2,80 m
2,0 m
130 lx
ø 5,60 m
4,0 m
30 lx
90°
ø 11,20 m
8,0 m
Emax (lux)
Höhe (h)

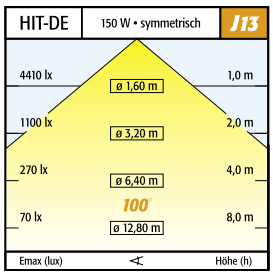
HIT-DE
150 W • symmetrisch
J13
4410 lx
ø 1,60 m
1,0 m
1100 lx
ø 3,20 m
2,0 m
270 lx
ø 6,40 m
4,0 m
70 lx
100°
ø 12,80 m
8,0 m
Emax (lux)
Höhe (h)

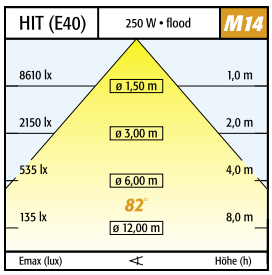
HIT (E40)
250 W • flood
M14
8610 lx
ø 1,50 m
1,0 m
2150 lx
ø 3,00 m
2,0 m
535 lx
ø 6,00 m
4,0 m
135 lx
82°
ø 12,00 m
8,0 m
Emax (lux)
Höhe (h)

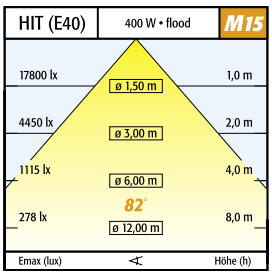
HIT (E40)
400 W • flood
M15
17800 lx
ø 1,50 m
1,0 m
4450 lx
ø 3,00 m
2,0 m
1115 lx
ø 6,00 m
4,0 m
278 lx
82°
ø 12,00 m
8,0 m
Emax (lux)
Höhe (h)

POW-LED 1 x 1 W 350 mA | spot 10° | **V12**

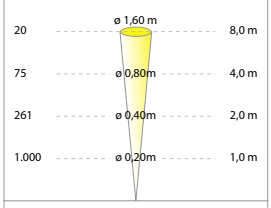

6 POW-LED 700 mA | spot 15° | **W11**

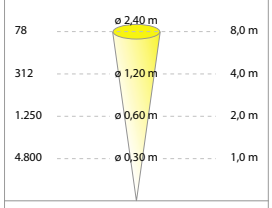

6 POW-LED 700 mA | medium 40° | **W12**

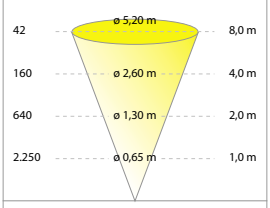

POW-LED 15 x 3 W 700 mA | flood 90° | **W23**

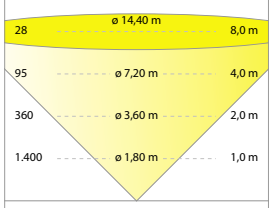

3 POW-LED 700 mA | medium 30° | **W33**

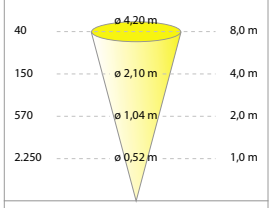

18 POW-LED 700 mA | flood 90° | **W55**

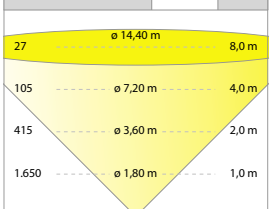

3 POW-LED 700 mA | spot 10° | **W61**

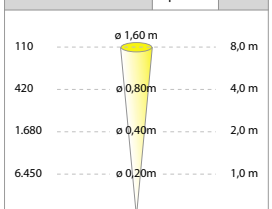

27 POW-LED 700 mA | multi 30/90° | **W62**

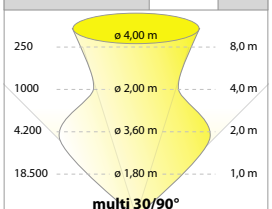

Modul 24 POW-LED | 700 mA | Multiflux 30°-120° **W82**

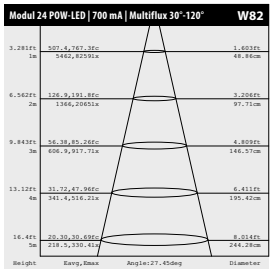

Modul 9 Multichip POW-LED | 700 mA | Flood 120° **X09**

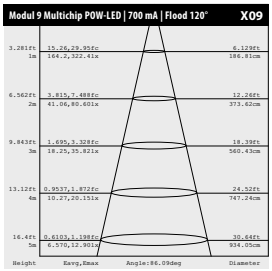

SURFACE SPOTLIGHTS

UNDERWATER | EXTERIOR

PAGES 116-155

SURFACE SPOTLIGHT
4.0011.15

UNDERWATER | EXTERIOR IP68

- Miniature spotlight for effect illumination
- Very low energy consumption
- Can be swivelled by 180°

4.0011.15 | SURFACE-MOUNTED SPOTLIGHT

FOR ILLUMINATION OF SMALL FOUNTAINS, WATERGAMES AND EXTERIOR AREAS.

IP68 | STAINLESS STEEL V4A 1.4571 316Ti | POW-LED INCL. | 3.000 K 4.500 K 6.000 K COLOR | RGB | CONSTANT CURRENT KONSTANT STROM | CABLE INCL. | DALI 1-10 V OPTIONAL DIMM | max 3m | 180° | CE | III

· Protection system IP68 – for a water depth of up to 3 m
· Entirely made of stainless steel 316Ti 1.4571
· Mounting foot adjustable through 180°
...
· POW-LED cold white, warm white, neutral white
· POW-LED colored
· Multichip POW-LED RGB
· operating mode: constant current
· Rotationally symmetric light distribution
...
· Cable pressure sleeve, V4A stainless steel
· Temperature-resistant silicon seal
· Toughened safety glass
· Supplied with UW-cable (3 m) already connected

ADDITIONAL PARTS

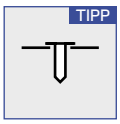

spike
150 mm
4.0011.50.00

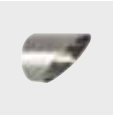

Anti-glare ring
Stainless steel 316Ti, ø 40 mm, length 50 mm
9.0011.00.70

PRODUCT LINE

4.0011
Recessed spotlights (exterior)
> Page 158

4.0012
Recessed spotlights (underwater)
> Page 92

< Project
Deutsche Oper, Götz-Friedrich-Platz, Berlin, Germany
Lüplow7, ifw Dipl.-Ing Jürgen Fiedler

SURFACE SPOTLIGHT
4.0011.15

UNDERWATER | EXTERIOR IP68

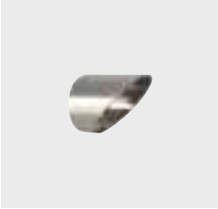

Anti-glare ring

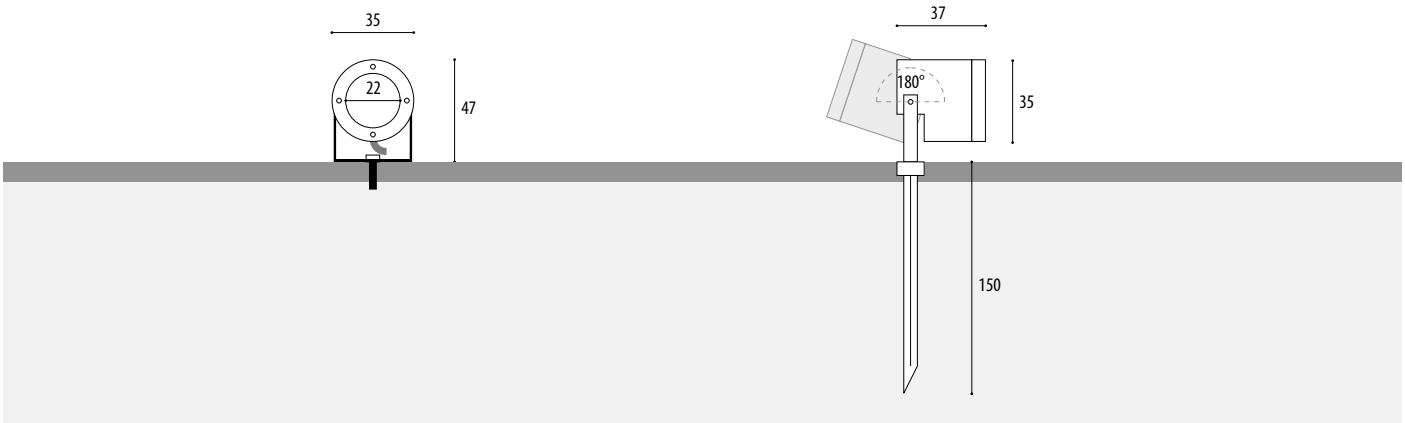

Article number	Lamps	Lumen	Light colour	Wattage	Current	Radation angle	Cable, installs	[V]
VERSIONS: UNDER- AND OVERWATER OPERATION (ACCORDING TO PRIOR AGREEMENT)								
4.0011.15.01	1 POW-LED	165 lm	6000K cold white	total 2 W	CC 350 mA	10° spot	UW, 2x0,5 qmm	V12
4.0011.15.02	1 POW-LED	135 lm	3000K warm white	total 2 W	CC 350 mA	10° spot	UW, 2x0,5 qmm	
4.0011.15.03	1 POW-LED	155 lm	4500K neutral white	total 2 W	CC 350 mA	10° spot	UW, 2x0,5 qmm	
4.0011.15.04	1 POW-LED		yellow	total 2 W	CC 350 mA	10° spot	UW, 2x0,5 qmm	
4.0011.15.05	1 POW-LED		red	total 2 W	CC 350 mA	10° spot	UW, 2x0,5 qmm	
4.0011.15.06	1 POW-LED	400 mW/LED	blue	total 2 W	CC 350 mA	10° spot	UW, 2x0,5 qmm	
4.0011.15.07	1 POW-LED		green	total 2 W	CC 350 mA	10° spot	UW, 2x0,5 qmm	
VERSIONS: ONLY UNDERWATER OPERATION								
4.0011.15.09	1 Multichip POW-LED		RGB	all on 5 W	CC 350 mA	120° flood	UW, 6x0,5 qmm	

SURFACE SPOTLIGHT
4.0011.15

IP68 | UNDERWATER | EXTERIOR

< Project
Rånåsfoss Bridge, Akershus, Norway
Ligthing designer: Erik Selmer; Client: Luminator AS

Power supplies Technical details see from page 234.

5.0635.65.03	Constant Current power supply, max 3 spotlights	5.0635.65.10	Constant Current power supply, 3-6 spotlights	5.0635.65.20	Constant Current power supply, 5-12 spotlights
5.0635.65.03		5.0635.65.10		5.0635.65.20	
5.0635.65.03		5.0635.65.10		5.0635.65.20	
5.0635.65.03		5.0635.65.10		5.0635.65.20	
5.0635.65.03		5.0635.65.10		5.0635.65.20	
5.0635.65.03		5.0635.65.10		5.0635.65.20	
5.0635.65.03		5.0635.65.10		5.0635.65.20	

5.0635.09.16	RGB-Controller, max 4 spotlights	5.0635.09.24	RGB-Controller, 5-8 spotlights	5.0635.09.50	RGB-Controller, 5-12 spotlights

NOTE

SOLE SALINE — SALINE version possible - Article number with additional „S" at the end

POW-LED, series-connected

OPTIONS

Possible beam angle POW-LED

10° | 30° | 45° | 90° | 15x40°

SURFACE SPOTLIGHT 4.0072

UNDERWATER | EXTERIOR IP68

- Compact spotlight for variable use
- Up to 1830 lumen light intensity
- Perfect for fountains and water attractions

4.0072 | SURFACE SPOTLIGHT

FOR ILLUMINATING AND ACCENTUATING OF FOUNTAINS, WATER FEATURES, BUILDINGS AND EXTERIOR AREAS.

CENTUM°° Updated version available: 4.0100 – Page 44

IP68 | STAINLESS STEEL V4A 1.4571 316Ti | ELECTRO POLISHED | POW-LED INCL. | 3.000 K 4.500 K 6.000 K BLUE | RGB RGB-W | DYNAMIC WHITE | CONSTANT CURRENT KONSTANT STROM | DALI 1-10 V OPTIONAL DIMM | CABLE INCL. | max 3m | 180°

NEW VERSIONS

· Protection class IP68 – up to 3m water depth
· Entirely made of stainless steel 316Ti 1.4571
· Mounting foot adjustable through 180°
...
· POW-LED cold white, warm white, neutral white
· POW-LED blue
· POW-LED RGB
· Multichip POW-LED RGB
· NEW: Multichip POW-LED RGB-W
· NEW: Multichip POW-LED Dynamic white
· operating mode: constant current
· Low voltage halogen QR-CB51 ES 12 V-AC
· Rotationally symmetric light distribution
...
· Screw-type cable fastener with M16x1.5, PVDF
· Constant-current power source/RGB controller/transformer external
· Supplied with lamp and 3m of underwater cable

ADDITIONAL PARTS

TIPP
Anti-glare ring
Stainless steel 316Ti,
ø 102 mm, length 124 mm
9.0072.00.70

spike
stainless steel, 205 mm
9.0072.20.00

Mounting plate
V4A, ø125 mm, turnable +/-45°
9.0072.21.00

DYNAMIC WHITE
Control unit
Touch Control for dynamic white, DMX
5.0690.09.80

Mounting plate
V4A, ø170 x 10 mm, for easy installation
9.0072.22.00

glass disc, frosted
for softer light distribution
(light loss approx. -15%)
9.0072.00.20

anti-glare louver
black, for 3 POW-LED and halogene
4.0071.00.50

anti-glare louver
black, for 6 POW-LED
4.0071.01.50

PRODUCT LINE

4.0071
Recessed spotlights (exterior)
> Page 170

4.0171
Recessed spotlights
(underwater)
> Page 96

< Project
Chatêau de Versaille, Paris, France
Grandes Eaux Nocturnes – Bosquet de la salle de Bal mis en éclairage par
la société Tech's – organisation Château de Versailles Spectales

SURFACE SPOTLIGHT 4.0072

UNDERWATER | EXTERIOR IP68

With Mounting plate

Spike

Anti-glare ring

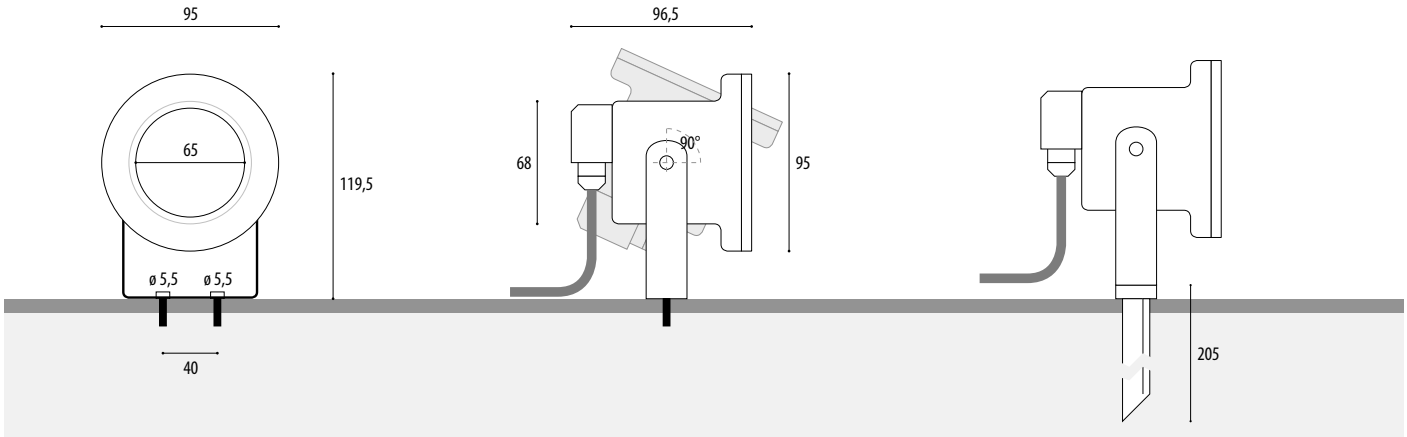

Article number	Lamps	Lumen	Light colour	Wattage	Current	Radation angle	Cable, installs	[V]
VERSIONS: UNDER- AND OVERWATER OPERATION (ACCORDING TO PRIOR AGREEMENT)								
POW-LED, RADATION ANGLE SPOT								
4.0072.00.01	3 POW-LED	495 lm	6000K cold white	total 5 W	CC 350 mA	10° spot	UW, 2x1,5 qmm	V32
4.0072.00.02	3 POW-LED	405 lm	3000K warm white	total 5 W	CC 350 mA	10° spot	UW, 2x1,5 qmm	
4.0072.00.03	3 POW-LED	465 lm	4500K neutral white	total 5 W	CC 350 mA	10° spot	UW, 2x1,5 qmm	
4.0072.00.06	3 POW-LED	400 mW/LED	blue	total 5 W	CC 350 mA	10° spot	UW, 2x1,5 qmm	
4.0072.00.09	3 POW-LED		RGB	all on 5 W	CC 350 mA	10° spot	UW, 6x0,5 qmm	
POW-LED, RADATION ANGLE MEDIUM								
4.0072.00.11	3 POW-LED	495 lm	6000K cold white	total 5 W	CC 350 mA	30° medium	UW, 2x1,5 qmm	V33
4.0072.00.12	3 POW-LED	405 lm	3000K warm white	total 5 W	CC 350 mA	30° medium	UW, 2x1,5 qmm	
4.0072.00.13	3 POW-LED	465 lm	4500K neutral white	total 5 W	CC 350 mA	30° medium	UW, 2x1,5 qmm	
4.0072.00.16	3 POW-LED	400 mW/LED	blue	total 5 W	CC 350 mA	30° medium	UW, 2x1,5 qmm	
4.0072.00.19	3 POW-LED		RGB	all on 5 W	CC 350 mA	30° medium	UW, 6x0,5 qmm	
HALOGEN								
4.0072.00.20	QR-CBC51 (IRC)	300	3000K	20W	12V-AC	36°	UW, 2x1,5 qmm	C63
4.0072.00.35	QR-CBC51 (IRC)	620	3000K	35W	12V-AC	36°	UW, 2x1,5 qmm	C73
VERSIONS: ONLY UNDERWATER OPERATION								
POW-LED, RADATION ANGLE SPOT								
4.0072.30.01	3 POW-LED	915 lm	6000K cold white	total 9 W	CC 700 mA	10° spot	UW, 2x1,5 qmm	W61
4.0072.30.02	3 POW-LED	750 lm	3000K warm white	total 9 W	CC 700 mA	10° spot	UW, 2x1,5 qmm	
4.0072.30.03	3 POW-LED	855 lm	4500K neutral white	total 9 W	CC 700 mA	10° spot	UW, 2x1,5 qmm	
4.0072.30.06	3 POW-LED	630 mW/LED	blue	total 9 W	CC 700 mA	10° spot	UW, 2x1,5 qmm	
4.0072.30.09	3 POW-LED		RGB	all on 9 W	CC 700 mA	10° spot	UW, 6x0,5 qmm	
4.0072.30.21	6 POW-LED	1830 lm	6000K cold white	total 17 W	CC 1400 mA	10° spot	UW, 2x1,5 qmm	W11
4.0072.30.22	6 POW-LED	1500 lm	3000K warm white	total 17 W	CC 1400 mA	10° spot	UW, 2x1,5 qmm	
4.0072.30.23	6 POW-LED	1710 lm	4500K neutral white	total 17 W	CC 1400 mA	10° spot	UW, 2x1,5 qmm	
4.0072.30.29	3 Multichip POW-LED		RGB	all on 28 W	CC 700 mA	10° spot	UW, 6x0,5 qmm	
POW-LED, RADATION ANGLE MEDIUM								
4.0072.30.11	3 POW-LED	915 lm	6000K cold white	total 9 W	CC 700 mA	30° medium	UW, 2x1,5 qmm	W33
4.0072.30.12	3 POW-LED	750 lm	3000K warm white	total 9 W	CC 700 mA	30° medium	UW, 2x1,5 qmm	
4.0072.30.13	3 POW-LED	855 lm	4500K neutral white	total 9 W	CC 700 mA	30° medium	UW, 2x1,5 qmm	
4.0072.30.16	3 POW-LED	630 mW/LED	blue	total 9 W	CC 700 mA	30° medium	UW, 2x1,5 qmm	
4.0072.30.19	3 POW-LED		RGB	all on 9 W	CC 700 mA	30° medium	UW, 6x0,5 qmm	
4.0072.30.31	6 POW-LED	1830 lm	6000K cold white	total 17 W	CC 1400 mA	30° medium	UW, 2x1,5 qmm	W12
4.0072.30.32	6 POW-LED	1500 lm	3000K warm white	total 17 W	CC 1400 mA	30° medium	UW, 2x1,5 qmm	
4.0072.30.33	6 POW-LED	1710 lm	4500K neutral white	total 17 W	CC 1400 mA	30° medium	UW, 2x1,5 qmm	
4.0072.30.39	3 Multichip POW-LED		RGB	all on 28 W	CC 700 mA	45° medium	UW, 6x0,5 qmm	
NEW **4.0072.30.43**	1 Multichip POW-LED	neutral white: 140 lm	RGB-NW neutral white 4500K	all on 4 W	CC 350 mA	35° medium	UW, 8x0,5 qmm	
4.0072.30.80	1 Multichip POW-LED		3000K-6000K dynamic white	all on 4 W	CC 350 mA	35° medium	UW, 8x0,5 qmm	
HALOGEN								
4.0072.30.50	QR-CBC51 (IRC)	870	3000K	50W	12V-AC	36°	UW, 2x1,5 qmm	C83

IP68 | UNDERWATER | EXTERIOR

< Project
Norwegian Bank, Oslo, Norway

Power supplies Technical details see from page 234.

5.0635.65.03	Constant Current power supply, max 1 spotlights	5.0635.65.10	Constant Current power supply, max 2 spotlights	5.0635.65.20	Constant Current power supply, 2-4 spotlights
5.0635.65.03		5.0635.65.10		5.0635.65.20	
5.0635.65.03		5.0635.65.10		5.0635.65.20	
5.0635.65.03		5.0635.65.10		5.0635.65.20	
5.0635.09.16	RGB-Controller, max 4 spotlights				

5.0635.65.03	Constant Current power supply, max 1 spotlights	5.0635.65.10	Constant Current power supply, max2 spotlights	5.0635.65.20	Constant Current power supply, 2-4 spotlights
5.0635.65.03		5.0635.65.10		5.0635.65.20	
5.0635.65.03		5.0635.65.10		5.0635.65.20	
5.0635.65.03		5.0635.65.10		5.0635.65.20	
5.0635.09.16	RGB-Controller, max 4 spotlights				

5.0098.00.00	Transformer, max 1 spotlights
5.0098.00.00	Transformer, max 1 spotlights

5.0670.65.10	Constant Current power supply, max 1 spotlights	5.0670.65.20	Constant Current power supply, max 2 spotlights
5.0670.65.10		5.0670.65.20	
5.0670.65.10		5.0670.65.20	
5.0670.65.10		5.0670.65.20	
5.0670.09.18	RGB-Controller, max 6 spotlights		
5.0670.00.06	Constant Current power supply, max 1 spotlights		
5.0670.00.06			
5.0670.00.06			
5.0670.09.18	RGB-Controller, max 2 spotlights		

5.0670.65.10	Constant Current power supply, max 1 spotlights	5.0670.65.20	Constant Current power supply, max 2 spotlights
5.0670.65.10		5.0670.65.20	
5.0670.65.10		5.0670.65.20	
5.0670.65.10		5.0670.65.20	
5.0670.09.18	RGB-Controller, max 6 spotlights		
5.0670.00.06	Constant Current power supply, max 1 spotlights		
5.0670.00.06			
5.0670.00.06			
5.0670.09.18	RGB-Controller, max 2 spotlights		
5.0635.09.52	RGB-W-Controller, max 12 spotlights		
5.0635.09.52			

5.0098.00.00	Transformer, max 1 spotlights

NOTE

SOLE SALINE — SALINE version possible - Article number with additional „S" at the end

POW-LED, series-connected

OPTIONS

Possible beam angle POW-LED

10° | 30° | 45° | 90° | 15x40°

Possible beam angle HALOGENE

10° | 24° | 36° | 60°

POW-LED monochrome, single colour in green, red, amber, turquoise

230 V — Internal power supply available on request

SURFACE SPOTLIGHT 4.0086

UNDERWATER | EXTERIOR | IP68

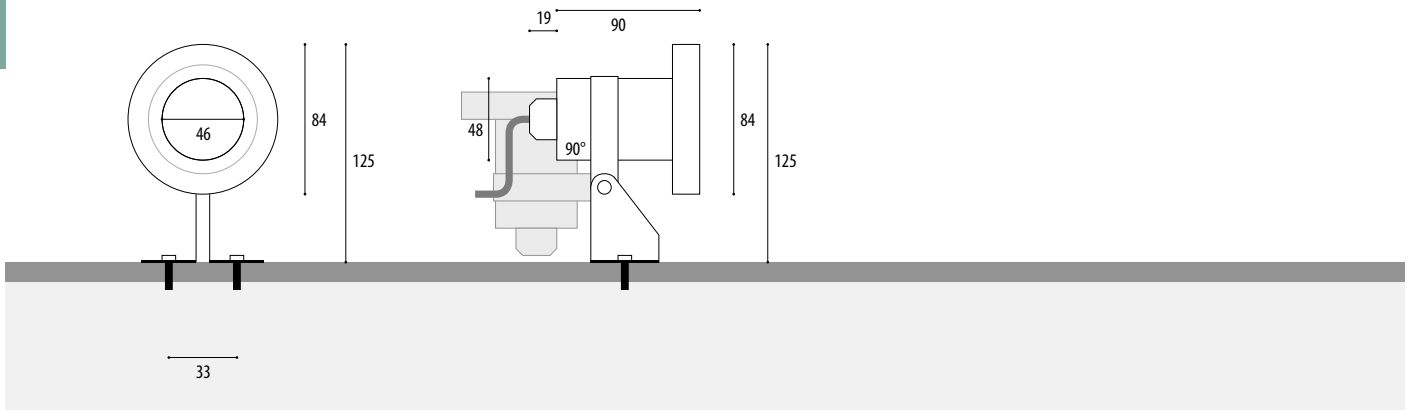

Article number	Lamps	Lumen	Light colour	Wattage	Current	Socket	Radation angle	Cable, installs	[V]
VERSIONS: UNDER- AND OVERWATER OPERATION (ACCORDING TO PRIOR AGREEMENT)									
POW-LED									
4.0086.00.14	3 POW-LED		yellow	total 5 W	CC 350 mA		30° medium	UW, 2x1,5 qmm	
4.0086.00.15	3 POW-LED		red	total 5 W	CC 350 mA		30° medium	UW, 2x1,5 qmm	
4.0086.00.16	3 POW-LED		blue	total 5 W	CC 350 mA		30° medium	UW, 2x1,5 qmm	
4.0086.00.17	3 POW-LED		green	total 5 W	CC 350 mA		30° medium	UW, 2x1,5 qmm	
4.0086.00.19	3 POW-LED		RGB	all on 5 W	CC 350 mA		30° medium		
QR-CB51									
4.0086.00.20	QR-CBC51	210	3000K	20W	12V-AC	GU5,3	36°	Si, 2x1,5 qmm	C22
4.0086.00.35	QR-CBC51	430	3000K	35W	12V-AC	GU5,3	36°	Si, 2x1,5 qmm	C33
VERSIONS: ONLY UNDERWATER OPERATION									
POW-LED									
4.0086.00.11	3 POW-LED	915 lm	6000K cold white	total 9 W	CC 700 mA		30° medium	UW, 2x1,5 qmm	W33
4.0086.00.12	3 POW-LED	750 lm	3000K warm white	total 9 W	CC 700 mA		30° medium	UW, 2x1,5 qmm	W33
4.0086.00.13	3 POW-LED	855 lm	4500K neutral white	total 9 W	CC 700 mA		30° medium	UW, 2x1,5 qmm	
4.0086.00.39	3 POW-LED		RGB	all on 9 W	CC 700 mA		30° medium	Si, 6x0,5 qmm	
QR-CB51									
4.0086.00.50	QR-CBC51	680	3000K	50W	12V-AC	GU5,3	36°	Si, 2x1,5 qmm	C43
4.0086.00.75	QR-CBC51		3000K	75W	12V-AC	GU5,3	60°	Si, 2x1,5 qmm	C53
QPAR16									
4.0086.00.51	QPAR16			35W	230V	GU10	35°	Si, 3x1,5 qmm	G11
4.0086.00.52	QPAR16			50W	230V	GU10	35°	Si, 3x1,5 qmm	G12

4.0086 | SURFACE-MOUNTED SPOTLIGHT

FOR ILLUMINATING AND ACCENTUATING OF FOUNTAINS, WATER FEATURES, BUILDINGS AND EXTERIOR AREAS.

CENTUM°° Updated version available: 4.0100 – Page 44

IP68 | STAINLESS STEEL V4A 1.4571 316Ti | POW-LED INCL. | 3.000 K 4.500 K 6.000 K COLOR | RGB | CONSTANT CURRENT KONSTANT STROM | CABLE INCL. | DALI 1-10 V OPTIONAL DIMM | max 3m | 90° | CE | III

- Protection class IP68 – up to 3m water depth
- Entirely made of stainless steel 316Ti 1.4571
- Mounting foot adjustable through 90°

...

- POW-LED cold white, warm white, neutral white
- POW-LED clored
- POW-LED RGB
- operating mode: constant current
- Low voltage halogen QR-CB51 ES 12 V-AC
- High voltage QPAR16

...

- Cable gland PG11, marine grade 316Ti stainless steel
- Temperature-resistant silicon seal
- Toughened safety glass
- Supplied with light source and cable (3 m) already connected

Power supplies Technical details see from page 234.

5.0635.65.03	Constant Current power supply, max 1 spotlights	5.0635.65.10	Constant Current power supply, max 2 spotlights	5.0635.65.20	Constant Current power supply, 2-4 spotlights
5.0635.65.03		5.0635.65.10		5.0635.65.20	
5.0635.65.03		5.0635.65.10		5.0635.65.20	
5.0635.65.03		5.0635.65.10		5.0635.65.20	
5.0635.09.16	RGB-Controller, max 4 spotlights				
5.0098.00.00	Transformer, max 1 spotlights				
5.0098.00.00	Transformer, max 1 spotlights				

5.0670.65.10	Constant Current power supply, max 1 spotlights
5.0670.65.10	
5.0670.65.10	
5.0670.09.18	RGB-Controller, max 6 spotlights
5.0098.00.00	Transformer, max 1 spotlights
5.0100.00.00	Transformer, max 1 spotlights

NOTE

POW-LED montées en série

OPTIONS

Possible beam angle POW-LED

10° | 30° | 45° | 90°

Possible beam angle HALOGENE

10° | 24° | 36° | 60°

ADDITIONAL PARTS

colour filter, dichroitic, for halogene
4.0081.04.00 yellow **4.0081.06.00** blue
4.0081.05.00 red **4.0081.07.00** green

spike
280 mm
4.0086.50.00

SURFACE SPOTLIGHT 4.0240

UNDERWATER | EXTERIOR IP68

- Circumferential central illumination of the fountain
- Up to 1700 lumen light intensity
- Easy installation on the water pipe

4.0240 | SURFACE SPOTLIGHT

FOR ILLUMINATION OF FOUNTAINS UP TO A NOZZLE SIZE OF 1 INCH.

IP68 | STAINLESS STEEL V4A 1.4571 316Ti | ELECTRO POLISHED | POW-LED INCL. | 3.000 K 4.500 K 6.000 K BLUE | RGB-W | CONSTANT VOLTAGE KONSTANT SPANNUNG | DALI 1-10 V OPTIONAL DIMM | max 3m

· Protection class IP68 – up to 3m water depth
· Entirely made of stainless steel 316Ti 1.4571
· to fit on nozzles up to 1 inch
...
· POW-LED cold white, warm white, neutral white
· POW-LED royal blue
· Multichip POW-LED RGB-W
· operating mode: constant voltage
· Rotationally symmetric light distribution

· Cable gland PG9, marine grade 316Ti stainless steel
· Constant-voltage power source/RGB-W controller
· Supplied with lamp and 3 m of underwater cable

< Project
Rokoko Schloss, Schwäbisch Gmünd, Germany
Photo: Matthias Wassermann, www. mawpix.com

SURFACE SPOTLIGHT 4.0240

UNDERWATER | EXTERIOR | IP68

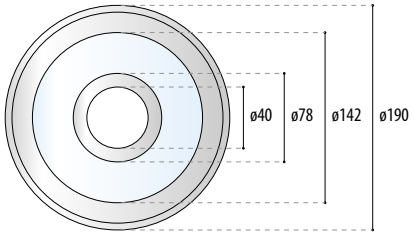

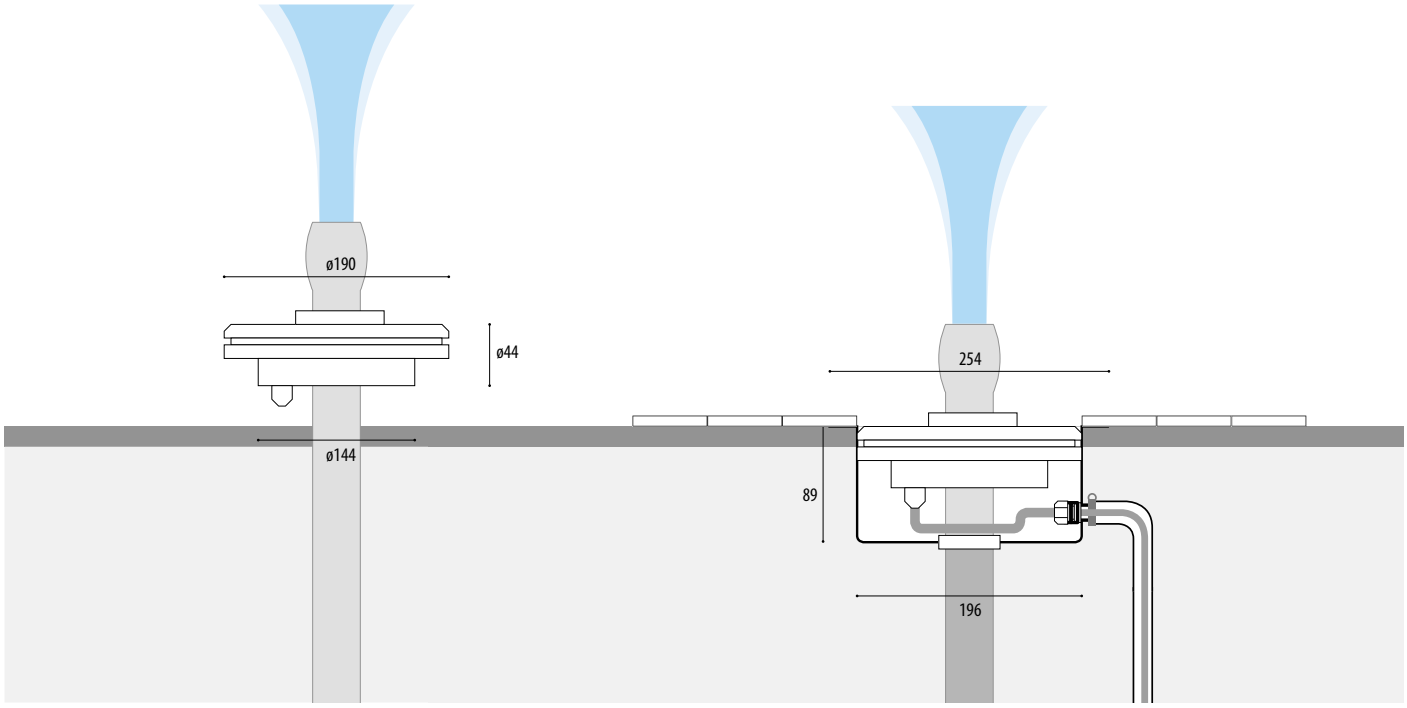

Article number	Lamps	Lumen	Light colour	Wattage	Voltage	Radation angle	UW-Cable, installs
VERSIONS: ONLY UNDERWATER OPERATION							
4.0240.00.11	9 POW-LED	1700 lm	6000K cold white	total 18 W	CV 12 V DC	30° medium	UW, 2x2,5 qmm
4.0240.00.12	9 POW-LED	1330 lm	3000K warm white	total 18 W	CV 12 V DC	30° medium	UW, 2x2,5 qmm
4.0240.00.13	9 POW-LED	1500 lm	4500K neutral white	total 18 W	CV 12 V DC	30° medium	UW, 2x2,5 qmm
4.0240.00.16	9 POW-LED		460 nm royal blue	total 18 W	CV 12 V DC	30° medium	UW, 2x2,5 qmm
4.0240.00.41	3 Multichip POW-LED	coldwhite: 620 lm	RGB-CW cold white 6000K	all on 24 W	CV 12 V DC	30° medium	UW, 2x2,5 + 4x0,5 qmm
4.0240.00.42	3 Multichip POW-LED	warmwhite: 500 lm	RGB-WW warm white 3000K	all on 24 W	CV 12 V DC	30° medium	UW, 2x2,5 + 4x0,5 qmm
4.0240.00.43	3 Multichip POW-LED	neutralwhite: 550 lm	4500K RGB neutral white	all on 24 W	CV 12 V DC	30° medium	UW, 2x2,5 + 4x0,5 qmm
4.0240.00.44	3 Multichip POW-LED		RGB amber	all on 24 W	CV 12 V DC	30° medium	UW, 2x2,5 + 4x0,5 qmm

INSTALLATION HOUSING

4.0240.01.00	made of V4A stainless steel with 1.5 m protective cable tube and M20 plastic terminating connection, for installation in concrete

SURFACE SPOTLIGHT 4.0240

IP68 | UNDERWATER | EXTERIOR

< Project
Railway Station, Gaggenau, Germany
Client: www.hedisa.de

< Project
Kronach leuchtet, Kronach, Germany
Photo: Stephan Amm

NOTE

Project/installation details required.

OPTIONS

Possible beam angle POW-LED

10° | 30° | 45° | 90° | 15x40°

POW-LED monochrome, single colour in green, red, amber, turquoise

CUSTOM MADE — Variants for other nozzle sizes on request

DALI 1-10 V OPTIONAL DIMM — 12 V-DC dimmable with dimming module 5.0690.03.15. Note: Other cable to the spotlight is required. Requires further agreements.

RGB-W — Individual configuration of the LED multichips possible

Power supplies

Technical details see from page 234.

5.0600.65.20	Constant Voltage power supply, max 1 spotlights	5.0600.65.60	Constant Voltage power supply, max 3 spotlights	5.0600.65.15	Constant Voltage power supply, max 6 spotlights
5.0600.65.20		5.0600.65.60		5.0600.65.15	
5.0600.65.20		5.0600.65.60		5.0600.65.15	
5.0600.65.20					
5.0670.09.52	RGB-W-Controller, max 4 spotlights				
5.0670.09.52					
5.0670.09.52					
5.0670.09.52					

SURFACE SPOTLIGHT 4.0192

UNDERWATER | EXTERIOR IP68

- High-quality spotlight for many application areas
- Up to 1980 lumen light intensity
- Can be swivelled up to 180° individually

4.0192 | SURFACE-SPOTLIGHT

FOR LIGHTING FOUNTAINS AND EXTERIOR AREAS.

IP68 | STAINLESS STEEL V4A 1.4571 316Ti | POW-LED INCL. | 3.000 K 4.500 K 6.000 K | RGB | CONSTANT CURRENT CONSTANT VOLTAGE | DALI 1-10 V OPTIONAL DIMM | CABLE INCL. | max 3m | 180° | 90° | CE

· Protection system IP68 – for a water depth of up to 3 m
· Entirely made of stainless steel 316Ti
· Mounting foot adjustable through 180° or 90°
...
· operating mode: constant current
  · POW-LED cold white, warm white, neutral white, CC
  · POW-LED RGB
· operating mode: constant voltage
  · POW-LED cold white, warm white, neutral white, CV
...
· Cable gland PG13,5, marine grade 316Ti stainless steel
· Temperature-resistant silicon seal
· Toughened safety glass
· Supplied with light source and 3 m of underwater cable

ADDITIONAL PARTS

Anti-glare ring
Stainless steel 316Ti, ø 178 mm, length 203 mm
9.0192.00.70

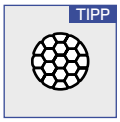

anti-glare louver
black, for POW-LED
4.0003.02.01

glass disc, frosted
for softer light distribution (light loss approx. -15%)
4.0066.01.00

spike
Stainless steel, 395 mm, for mounting foot 90°
4.0305.50.00

PRODUCT LINE

4.0197
Recessed spotlights (exterior)
> Page 178

4.0198
Recessed spotlights (exterior)
> Page 182

4.0195
Surface spotlights
> Page 136

< Project
Place de Navigation, Lausanne, Switzerland
Client: Ville de Lausanne; Planner: Schréder Swiss

SURFACE SPOTLIGHT 4.0192

UNDERWATER | EXTERIOR IP68

180° adjustable

90° adjustable

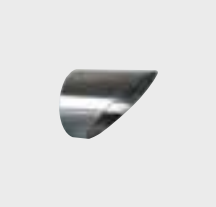
Anti-glare ring

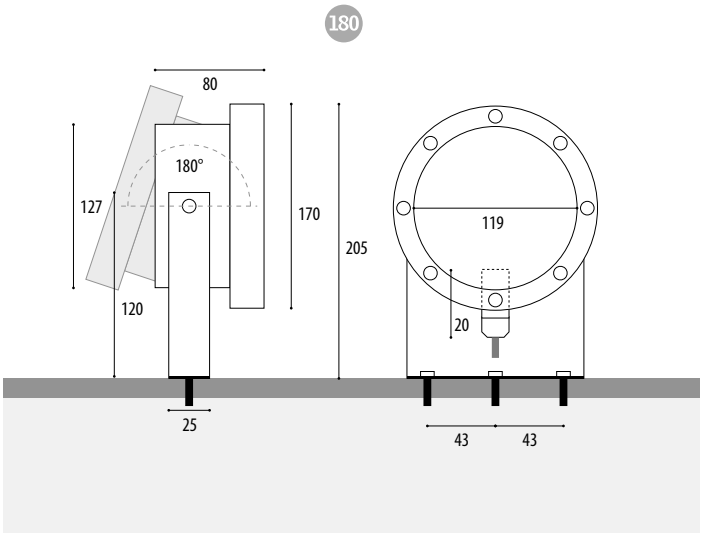

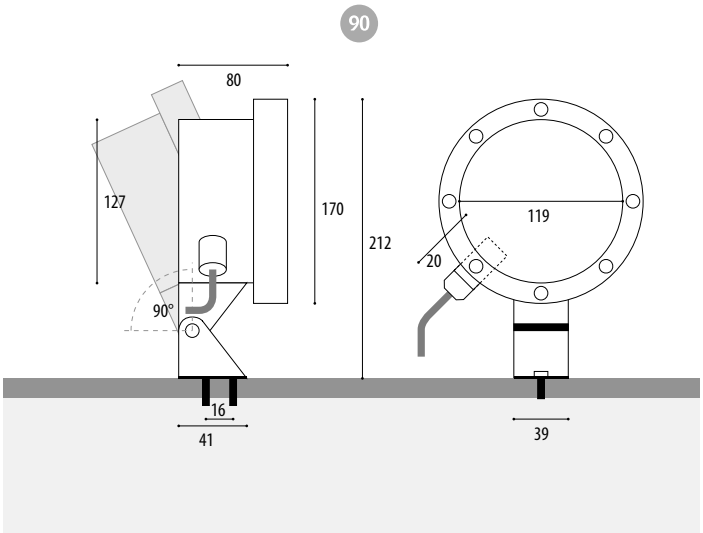

90 Article number	180 Article number	Lamps	Lumen	Light colour	Wattage	Current/Voltage	Socket	Radation angle	Cable	[V]
VERSIONS: UNDER- AND OVERWATER OPERATION (ACCORDING TO PRIOR AGREEMENT)										
POW-LED – 350 MA										
4.0192.90.01	**4.0192.18.01**	12 POW-LED	1980 lm	6000K cold white	total 15 W	CC 350 mA	Klemme	30° medium	UW, 2x1,5 qmm	V23
4.0192.90.02	**4.0192.18.02**	12 POW-LED	1620 lm	3000K warm white	total 15 W	CC 350 mA	Klemme	30° medium	UW, 2x1,5 qmm	
4.0192.90.03	**4.0192.18.03**	12 POW-LED	1860 lm	4500K neutral white	total 15 W	CC 350 mA	Klemme	30° medium	UW, 2x1,5 qmm	
4.0192.90.09	**4.0192.18.09**	12 POW-LED		RGB	all on 19 W	CC 350 mA	Klemme	30° medium	UW, 8x0,5 qmm	
POW-LED – 12 V-DC										
4.0192.90.61	**4.0192.18.61**	12 POW-LED	1980 lm	6000K cold white	total 15 W	CV 12 V-DC	Klemme	30° medium	UW, 2x1,5 qmm	
4.0192.90.62	**4.0192.18.62**	12 POW-LED	1620 lm	3000K warm white	total 15 W	CV 12 V-DC	Klemme	30° medium	UW, 2x1,5 qmm	
4.0192.90.63	**4.0192.18.63**	12 POW-LED	1860 lm	4500K neutral white	total 15 W	CV 12 V-DC	Klemme	30° medium	UW, 2x1,5 qmm	
VERSIONS: ONLY UNDERWATER OPERATION										
POW-LED 700 MA										
4.0192.90.39	**4.0192.18.39**	12 POW-LED		RGB	all on 34 W	CC 700 mA	Klemme	30° medium	UW, 8x0,5 qmm	

IP68 | UNDERWATER | EXTERIOR

< Project
Tauernspa Kaprun, Austria
Photo: Photoart Reifmüller

< Project
Plaza Bolivar Maracay, Venezuela
© Grupo MCI

Power supplies Technical details see from page 234.

5.0635.00.36	Constant Current power supply, max 3 spotlights
5.0635.00.36	
5.0635.00.36	
5.0635.09.50	RGB-Controller, max 3 spotlights

5.0600.65.60	Constant Voltage power supply, max 3 spotlights	5.0600.65.15	Constant Voltage power supply, max 9 spotlights
5.0600.65.60		5.0600.65.15	
5.0600.65.60		5.0600.65.15	

5.0670.09.18	RGB-Controller, max 1 spotlightsRGB

NOTE

SOLE SALINE — SALINE version possible - Article number with additional „S" at the end

POW-LED, series-connected at 350 mA

POW-LED in parallel connection at 12 V-DC

OPTIONS

Possible beam angle POW-LED

10° | 30° | 45° | 90° | 15x40°

DALI 1-10 V OPTIONAL DIMM — 12 V-DC dimmable with dimming module 5.0690.03.15. Note: Other cable to the spotlight is required. Requires further agreements.

SURFACE SPOTLIGHT 4.0195

UNDERWATER | EXTERIOR IP68

- High-quality spotlight for many application areas
- POW-LED versions with 230 V
- Can be swivelled up to 180° individually

4.0195 | SURFACE-MOUNTED SPOTLIGHT

FOR LIGHTING FOUNTAINS AND EXTERIOR AREAS.

IP68 | STAINLESS STEEL V4A 1.4571 316Ti | POW-LED INCL. | 3.000 K 4.500 K 6.000 K | 230 V | CABLE INCL. | 180° | 90° | CE

· Protection system IP68 – for a water depth of up to 3 m
· Entirely made of stainless steel 316Ti
· Mounting foot adjustable through 180° or 90°
...
· POW-LED cold white, warm white, neutral white, 230 V
· HIT-TC-CE
...
· Cable gland PG13,5, marine grade 316Ti stainless steel
· Temperature-resistant silicon seal
· Toughened safety glass
· Supplied with light source and 3 m of underwater cable

ADDITIONAL PARTS

Anti-glare ring
Stainless steel 316Ti, ø 178 mm, length 203 mm
9.0192.00.70

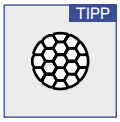

anti-glare louver
black, for POW-LED
4.0003.02.01

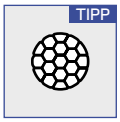

anti-glare louver
black, for HIT-TC-CE
4.0003.01.01

glass disc, frosted
for softer light distribution (light loss approx. -15%)
4.0066.01.00

spike
Stainless steel, 395 mm, for mounting foot 90°
4.0305.50.00

PRODUCT LINE

4.0197
Recessed spotlights (exterior)
> Page 178

4.0198
Recessed spotlights (exterior)
> Page 182

4.0192
Surface spotlights
> Page 132

< Project
Ypsilion Bridge, Drammen, Norway
Client: Luminator AS

SURFACE SPOTLIGHT 4.0195

UNDERWATER | EXTERIOR

IP68

180° adjustable

90° adjustable

90° adjustable

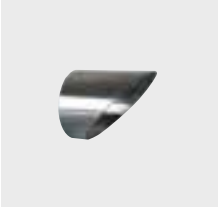
Anti-glare ring

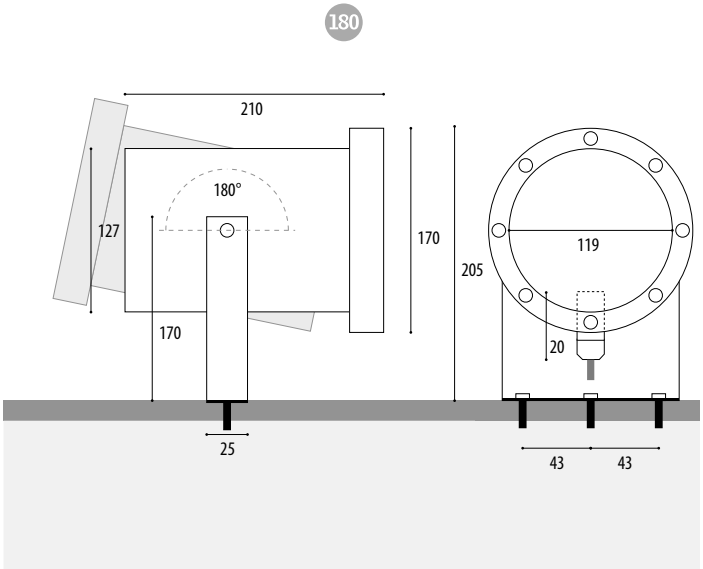

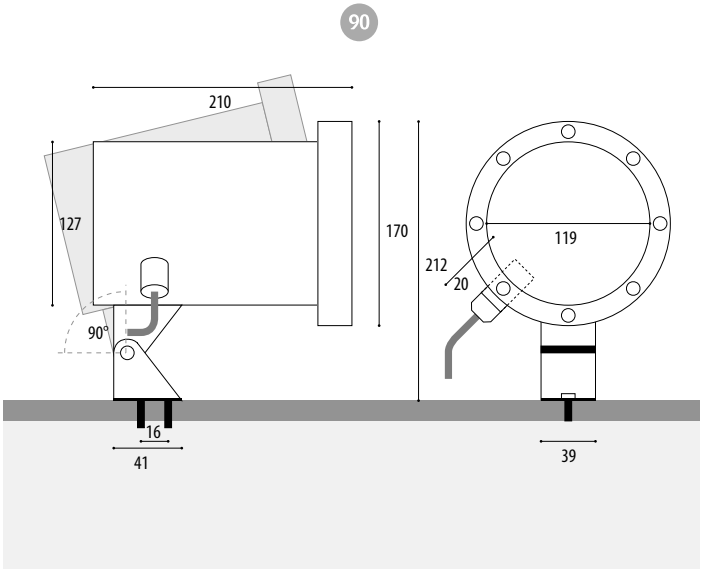

90 Article number	180 Article number	Lamps	Lumen	Light colour	Wattage	Current/Voltage	Socket	Radation angle	Cable	[V]
VERSIONS: UNDER- AND OVERWATER OPERATION (ACCORDING TO PRIOR AGREEMENT)										
POW-LED – 230 V										
4.0195.90.01	**4.0195.18.01**	12 POW-LED	1980 lm	6000K cold white	total 15 W	230V	Klemme	30° medium	UW, 3x1,5 qmm	V23
4.0195.90.02	**4.0195.18.02**	12 POW-LED	1620 lm	3000K warm white	total 15 W	230V	Klemme	30° medium	UW, 3x1,5 qmm	
4.0195.90.03	**4.0195.18.03**	12 POW-LED	1860 lm	4500K neutral white	total 15 W	230V	Klemme	30° medium	UW, 3x1,5 qmm	
HIT										
4.0195.90.20	**4.0195.18.20**	HIT-TC-CE	1.800lm		20W	230V	G8,5	15° spot	UW, 3x1,5 qmm	M30
4.0195.90.21	**4.0195.18.21**	HIT-TC-CE	1.500lm		20W	230V	G8,5	35° medium	UW, 3x1,5 qmm	M20
4.0195.90.22	**4.0195.18.22**	HIT-TC-CE	1.500lm		20W	230V	G8,5	7° superspot	UW, 3x1,5 qmm	M18
4.0195.90.23	**4.0195.18.23**	HIT-TC-CE	1.500lm		20W	230V	G8,5	55° flood	UW, 3x1,5 qmm	M32
VERSIONS: ONLY UNDERWATER OPERATION										
HIT										
4.0195.90.35	**4.0195.18.35**	HIT-TC-CE	3.100lm		35W	230V	G8,5	15° spot	UW, 3x1,5 qmm	M31
4.0195.90.36	**4.0195.18.36**	HIT-TC-CE	3.300lm		35W	230V	G8,5	35° medium	UW, 3x1,5 qmm	M21
4.0195.90.37	**4.0195.18.37**	HIT-TC-CE	3.300lm		35W	230V	G8,5	7° superspot	UW, 3x1,5 qmm	M19
4.0195.90.38	**4.0195.18.38**	HIT-TC-CE	3.300lm		35W	230V	G8,5	55° flood	UW, 3x1,5 qmm	M33

IP68 | UNDERWATER | EXTERIOR

< Project
Place Massena, Nizza, France

< Project
Rosengarten, Mannheim, Germany

Power supplies Technical details see from page 234.

	Integrated
	Integrated
	Integrated
	Integrated
	Integrated
	Integrated
	Integrated
	Integrated
	Integrated
	Integrated
	Integrated

NOTE

SOLE SALINE — SALINE version possible - Article number with additional „S" at the end

! — Not be used at accessible areas. (mains voltage 230V)

OPTIONS

Possible beam angle POW-LED

10° | 30° | 45° | 90° | 15x40°

SURFACE SPOTLIGHT 4.0365

UNDERWATER | EXTERIOR IP68

- Powerful spotlight for many application areas
- POW-LED RGB-W versions
- Can be swivelled up to 180° individually

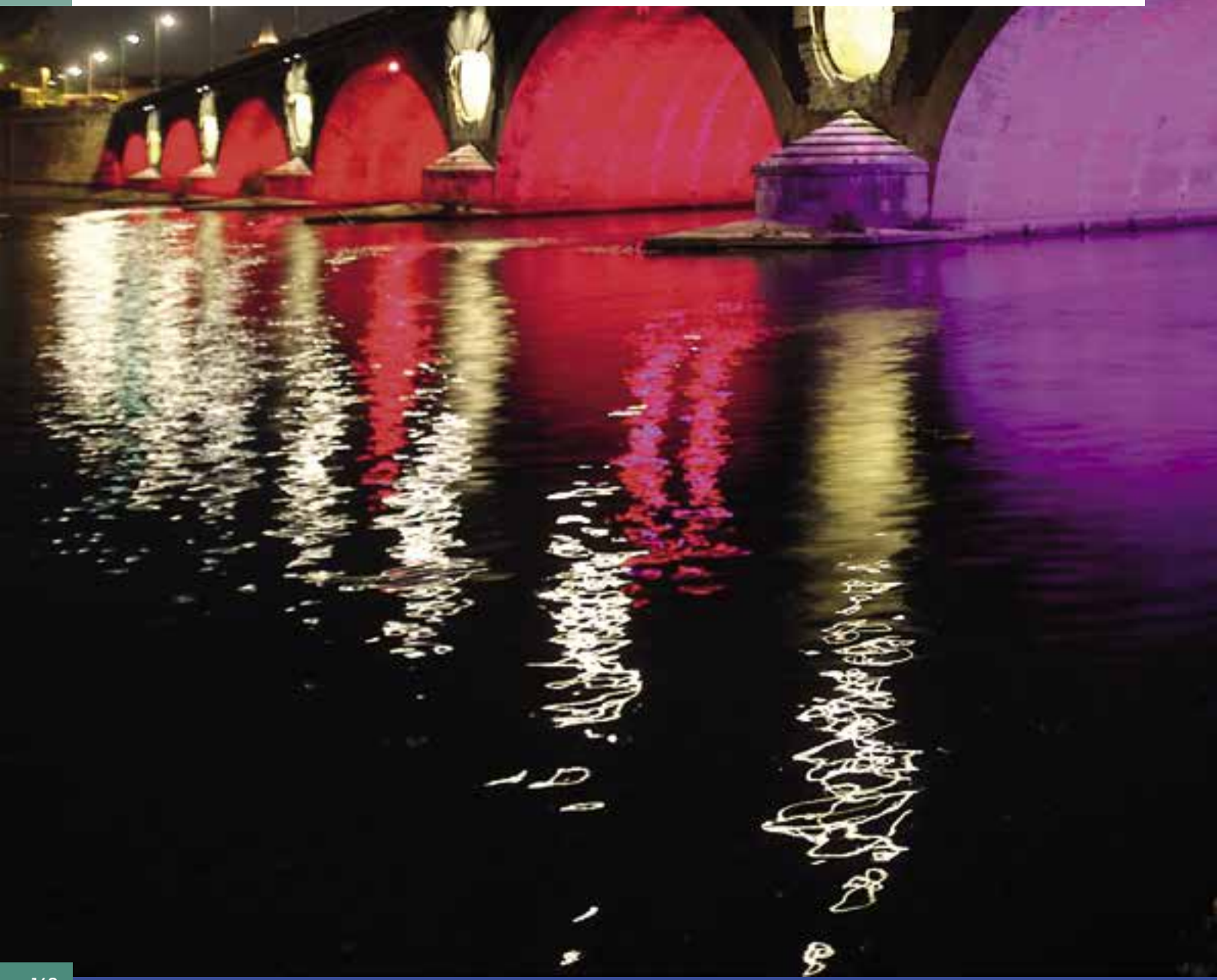

4.0365 | SURFACE SPOTLIGHT

FOR ILLUMINATING LARGE FOUNTAINS, BRIDGES AND EXTERIOR AREAS.

IP68 | STAINLESS STEEL V4A 1.4571 316Ti | POW-LED INCL. | 3.000 K 4.500 K 6.000 K | RGB RGB-W | CONSTANT CURRENT CONSTANT VOLTAGE | DALI 1-10 V OPTIONAL DIMM | 180° | 90° | CE | III

· Protection class IP68 – up to 3m water depth
· Entirely made of stainless steel 316Ti 1.4571
· Mounting foot adjustable through 180° or 90°
...
· operating mode: constant current
  · POW-LED cold white, warm white, neutral white, CC
  · POW-LED RGB
· operating mode: constant voltage
  · POW-LED cold white, warm white, neutral white, CV
  · Multichip POW-LED RGB-W
· POW-LED-Platine temperatur control (NTC)
· Halogene
...
· Cable gland PG16/21, marine grade 316Ti stainless steel
· Temperature-resistant silicon seal
· Toughened safety glass
· Ballast and ignitor fitted depending on the version
· POW-LED-Version with light source and 3 m cable
· conventional versions without bulb and without cable

ADDITIONAL PARTS

glass disc, frosted
for softer light distribution
(light loss approx. -15%)
4.0230.01.00

spike
Stainless steel, 395 mm, for mounting foot 90°
4.0305.50.00

double cable gland
made of V4A-stainless steel
4.0004.40.16

anti-glare louver
black, for symm. and asymm. Reflector
4.0003.01.00

angular ring
with 2 protection bars
4.0009.00.20

angular ring
with 4 protection bars
4.0009.00.40

PRODUCT LINE

4.0304
Recessed spotlights (exterior)
> Page 190

< Project
Pont Neuf, Toulouse, France

SURFACE SPOTLIGHT 4.0365

UNDERWATER | EXTERIOR | IP68

180° adjustable

90° adjustable

anti-glare louver

angular ring with 4 protection bars

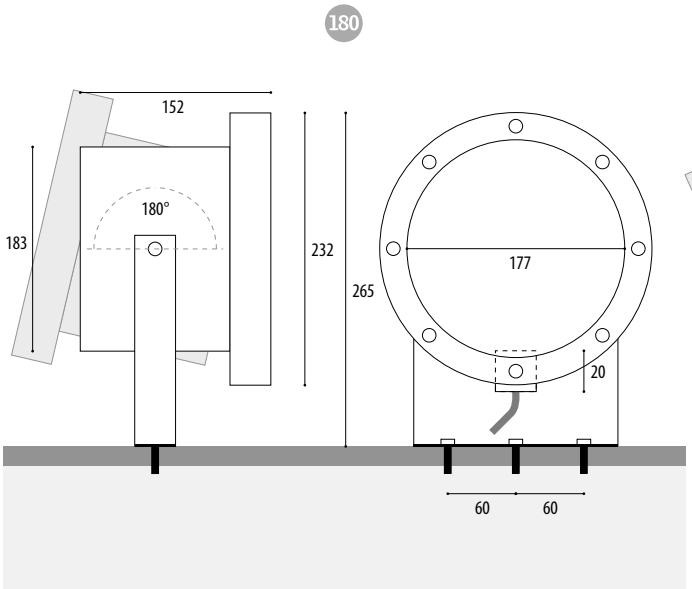

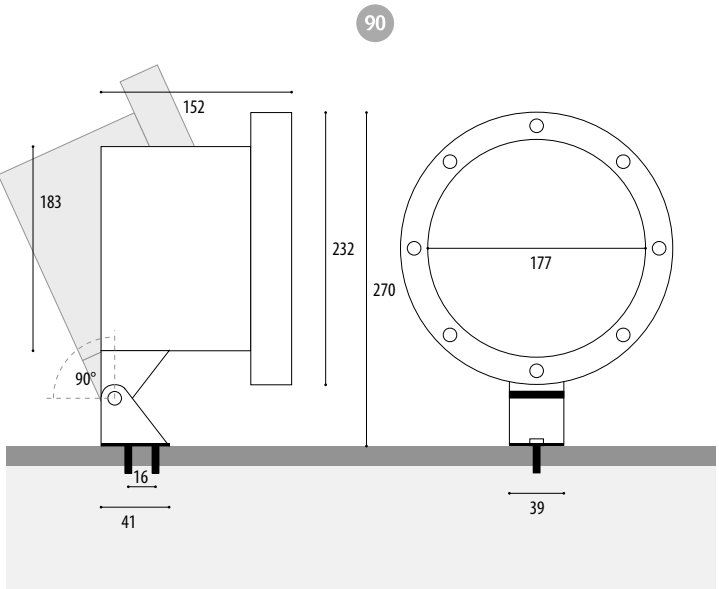

90 Article number	180 Article number	Lamps	Lumen	Light colour	Wattage	Current/Voltage	Socket			[V]
VERSIONS: UNDER- AND OVERWATER OPERATION (ACCORDING TO PRIOR AGREEMENT)										
POW-LED – 350 MA										
4.0365.00.01	**4.0362.00.01**	36 POW-LED	5940 lm	6000K cold white	total 43 W	CC 350 mA	Klemme	30°	UW, 8x0,5 qmm	V73
4.0365.00.02	**4.0362.00.02**	36 POW-LED	4860 lm	3000K warm white	total 43 W	CC 350 mA	Klemme	30°	UW, 8x0,5 qmm	
4.0365.00.03	**4.0362.00.03**	36 POW-LED	5580 lm	4500K neutral white	total 43 W	CC 350 mA	Klemme	30°	UW, 8x0,5 qmm	
4.0365.00.09	**4.0362.00.09**	36 POW-LED		RGB	all on 43 W	CC 350 mA	Klemme	30°	UW, 8x0,5 qmm	
POW-LED – 12 V-DC										
4.0365.00.61	**4.0362.00.61**	36 POW-LED	5940 lm	6000K cold white	total 43 W	CV 12 V-DC	Klemme	30°	UW, 2x2,5 qmm	
4.0365.00.62	**4.0362.00.62**	36 POW-LED	4860 lm	3000K warm white	total 43 W	CV 12 V-DC	Klemme	30°	UW, 2x2,5 qmm	
4.0365.00.63	**4.0362.00.63**	36 POW-LED	5580 lm	4500K neutral white	total 43 W	CV 12 V-DC	Klemme	30°	UW, 2x2,5 qmm	
HALOGEN										
4.0305.00.10	**4.0302.00.10**	QT12		3000K	90W	12V-AC	GY6,35	19°	UW, 2x2,5 qmm	B38
4.0305.00.35	**4.0302.00.35**	HIT-CRI			35W	230V	G12	19°	UW, 3x1,5 qmm	I31
4.0305.00.50	**4.0302.00.50**	HME			50W	230V	E27	109°	UW, 3x1,5 qmm	N31
VERSIONS: ONLY UNDERWATER OPERATION										
POW-LED										
4.0365.00.41	**4.0362.00.41**	12 Multichip POW-LED	coldwhite: 2720 lm	RGB-CW cold white 6000K	all on 110 W	12 V DC		30°	UW, 2x2,5 + 4x0,5 qmm	
4.0365.00.42	**4.0362.00.42**	12 Multichip POW-LED	warmwhite: 2095 lm	RGB-WW warm white 3000K	all on 110 W	12 V DC		30°	UW, 2x2,5 + 4x0,5 qmm	
4.0365.00.43	**4.0362.00.43**	12 Multichip POW-LED	neutralwhite: 2385 lm	RGB-NW neutral white 4500K	all on 110 W	12 V DC		30°	UW, 2x2,5 + 4x0,5 qmm	
4.0365.00.44	**4.0362.00.44**	12 Multichip POW-LED		RGB amber	all on 110 W	12 V DC		30°	UW, 2x2,5 + 4x0,5 qmm	
HALOGEN										
4.0305.00.00	**4.0302.00.00**	QT32			150W	230V	E27	24°	UW, 3x1,5 qmm	F33
4.0305.00.25	**4.0302.00.25**	M36			250W	24V-DC	GY6,35	28°	UW, 2x2,5 qmm	F37
4.0305.00.30	**4.0302.00.30**	QR-CBC51		3000K	6 x 50W	12V-AC	GU5,3	36°	UW, 2x2,5 qmm	C95
4.0305.00.38	**4.0302.00.38**	M38			300W	230V	GY9.5	24°	UW, 3x1,5 qmm	F38
4.0305.00.40	**4.0302.00.40**	M40			500W	230V	GY9.5	26°	UW, 3x1,5 qmm	F39
4.0305.00.70	**4.0302.00.70**	HIT-CRI			70W	230V	G12	19°	UW, 3x1,5 qmm	I33

SURFACE SPOTLIGHT 4.0365

IP68 | UNDERWATER | EXTERIOR

< Project
Watertower, Ronneby, Sweden
Client: Malux Sweden; Photo: Per Danilsson

	Power supplies	Technical details see from page 234.		
	5.0635.00.36	Constant Current power supply, max 1 spotlights		
	5.0635.00.36			
	5.0635.00.36			
	5.0635.09.50	RGB-Controller, max 1 spotlights		
	5.0600.65.60	Constant Voltage power supply, max 1 spotlights	5.0600.65.15	Constant Voltage power supply, max 3 spotlights
	5.0600.65.60		5.0600.65.15	
	5.0600.65.60		5.0600.65.15	
	5.0100.00.00	Transformer, max 1 spotlights		
	Integrated			
	Integrated			
	5.0670.09.52	RGB-W-Controller, max 1 spotlights		
	5.0670.09.52			
	5.0670.09.52			
	5.0670.09.52			
	Integrated			
	5.0312.00.01	Transformer, max 1 spotlights		
	5.0103.00.00	Transformer, max 1 spotlights		
	Integrated			
	Integrated			
	Integrated			

NOTE

SOLE SALINE — SALINE version possible - Article number with additional „S" at the end

OPTIONS

Possible beam angle POW-LED

10° | 30° | 45° | 90° | 15x40°

POW-LED monochrome, single colour in green, red, amber, turquoise

DALI 1-10 V OPTIONAL DIMM — 12 V-DC dimmable with dimming module 5.0690.03.15. Note: Other cable to the spotlight is required. Requires further agreements.

RGB-W — Individual configuration of the LED multichips possible

30 m — Water depths of up to 30 m available (Special version)

Please order the double cable gland for ring assembly separately (not for constant current 350 mA)

SURFACE SPOTLIGHT 4.0095

UNDERWATER | EXTERIOR IP68

- Powerful spotlight for many application areas
- Application of classic lamps
- Can be swivelled up to 180° individually

4.0095 | 4.0097 | SURFACE SPOTLIGHT

FOR ILLUMINATING LARGE FOUNTAINS, BRIDGES AND EXTERIOR AREAS.

IP68 | STAINLESS STEEL V4A 1.4571 316Ti | 230 V | max 3m | 90° | 180° | CABLE EXCL. | EXCL. | CE

· Protection class IP68 – up to 3m water depth
· Entirely made of stainless steel 316Ti 1.4571
· Mounting foot adjustable through 180° or 90°
...
· QT32
· HIT-CRI
· HIT-DE
· HST-DE
· with aluminium reflector

· Cable gland PG16/21, marine grade 316Ti stainless steel
· Temperature-resistant silicon seal
· Toughened safety glass
· Ballast and ignitor fitted depending on the version

ADDITIONAL PARTS

glass disc, frosted
for softer light distribution (light loss approx. -15%)
4.0230.01.00

spike
Stainless steel, 395 mm,
for mounting foot 90°
4.0305.50.00

double cable gland
made of V4A-stainless steel
4.0004.40.16

angular ring
with 2 protection bars
4.0009.00.20

anti-glare louver
black, for adjustable Reflector
4.0003.02.00

anti-glare louver
black, for symm. and asymm. Reflector
4.0003.01.00

angular ring
with 4 protection bars
4.0009.00.40

PRODUCT LINE

4.0098
Recessed spotlights (exterior)
> Page 186

< Project
Morild Fountain, Norway

SURFACE SPOTLIGHT 4.0095

UNDERWATER | EXTERIOR | IP68

90° adjustable

180° adjustable

angular ring with 4 protection bars

anti-glare louver

180

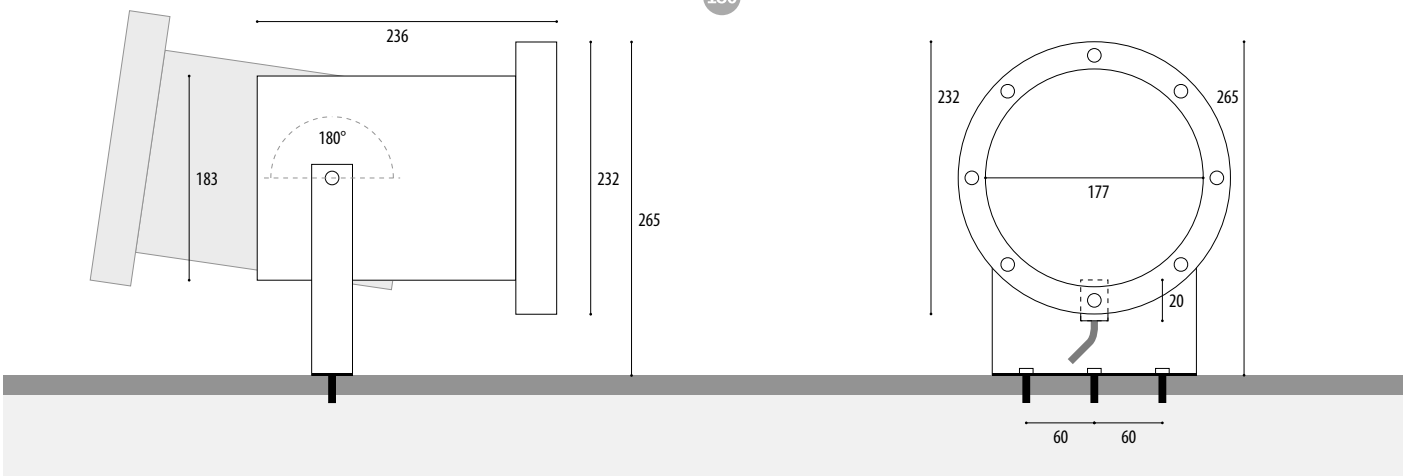

90

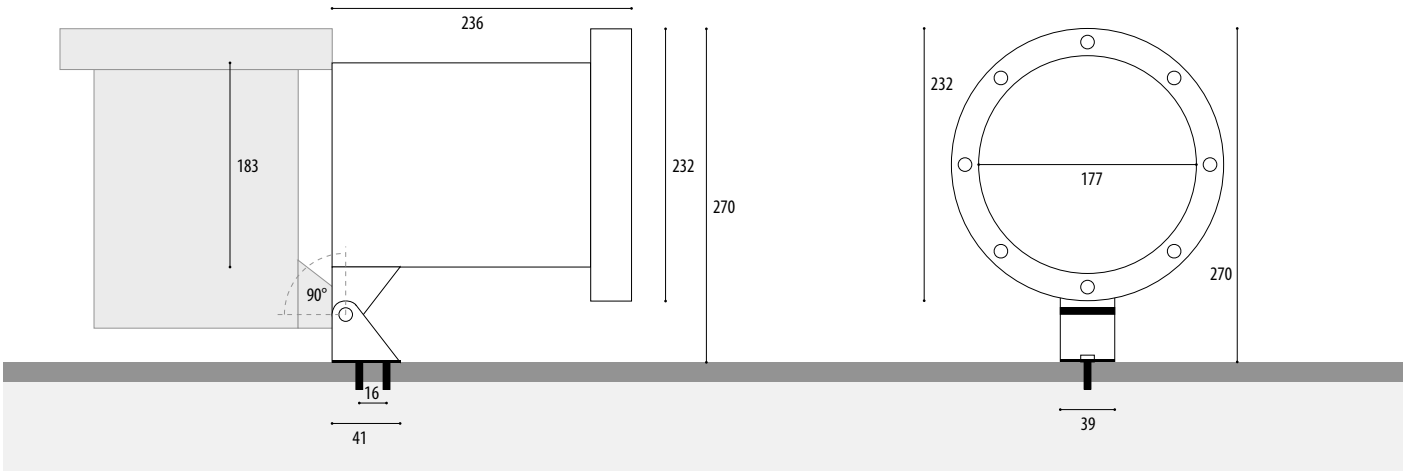

90 Article number	180 Article number	Lamps	Wattage	Voltage	Socket	Radation angle	Cable	[V]
VERSIONS: ONLY UNDERWATER OPERATION								
4.0095.00.00	**4.0097.00.00**	QT32	250W	230V	E27	24°	Si, 3x2,5 qmm	F35
4.0095.00.15	**4.0097.00.15**	HIT-CRI	150W	230V	G12	20°	Si, 3x2,5 qmm	I35
4.0095.00.16	**4.0097.00.16**	HIT-DE	150W	230V	RX7s-24	80°	Si, 3x2,5 qmm	J53
4.0095.00.17	**4.0097.00.17**	HST-DE	150W	230V	RX7s-24	80°	Si, 3x2,5 qmm	Q52
4.0095.00.70	**4.0097.00.70**	HIT-CRI	70W	230V	G12	19°	Si, 3x2,5 qmm	I33
4.0095.00.71	**4.0097.00.71**	HIT-DE	70W	230V	RX7s	80°	Si, 3x2,5 qmm	J51

SURFACE SPOTLIGHT 4.0095

IP68 | UNDERWATER | EXTERIOR

< Project
Neues Schloss Stuttgart, Germany

NOTE

SOLE SALINE

SALINE version possible - Article number with additional „S" at the end

OPTIONS

Please order the double cable gland for ring assembly separately

Coloured light sources available

Other beam angles available

CUSTOM MADE

Special designs available on request

	Power supplies	Technical details see from page 234.	anti-glare louver
	Integrated		4.0003.01.00
	Integrated		4.0003.01.00
	Integrated		4.0003.02.00
	Integrated		4.0003.02.00
	Integrated		4.0003.01.00
	Integrated		4.0003.02.00

SURFACE SPOTLIGHT 4.2202

UNDERWATER | EXTERIOR IP68

- Extremely robust and powerful spotlight
- Metal halide lamps with up to 90000 lumen
- Perfect for ship docks and high water fountains

4.2202 | SURFACE DOCK-LIGHT

FOR USE AT SHIP-DOCKS, RAW SEA AND FOR SPECIAL SOLUTIONS, IN FOUNTAINS AND HIGH WATERJETS.

IP68 | STAINLESS STEEL V4A 1.4571 316Ti | 230 V | max 5m | 180° | INCL | CABLE INCL. | CE

· Protection class IP68 – up to 5 m water depth
· Entirely made of stainless steel 316Ti 1.4571
· Cover is made of bronze
· Mounting foot adjustable through 180°
...
· metal halogen vapour lamps
...
· toughened safety glass which is resistant to temperature changes
· Supplied completely ready for connection, with ballast device and ignition device, light source and silicon cable (10 m)
· inclusive pivoting/standing frame

ADDITIONAL PARTS

TIPP

Protective grille
made of V4A-stainless steel
4.2001.00.00

< Project
Jet d'eau, Geneve, Switzerland

SURFACE SPOTLIGHT 4.2202

UNDERWATER | EXTERIOR | IP68

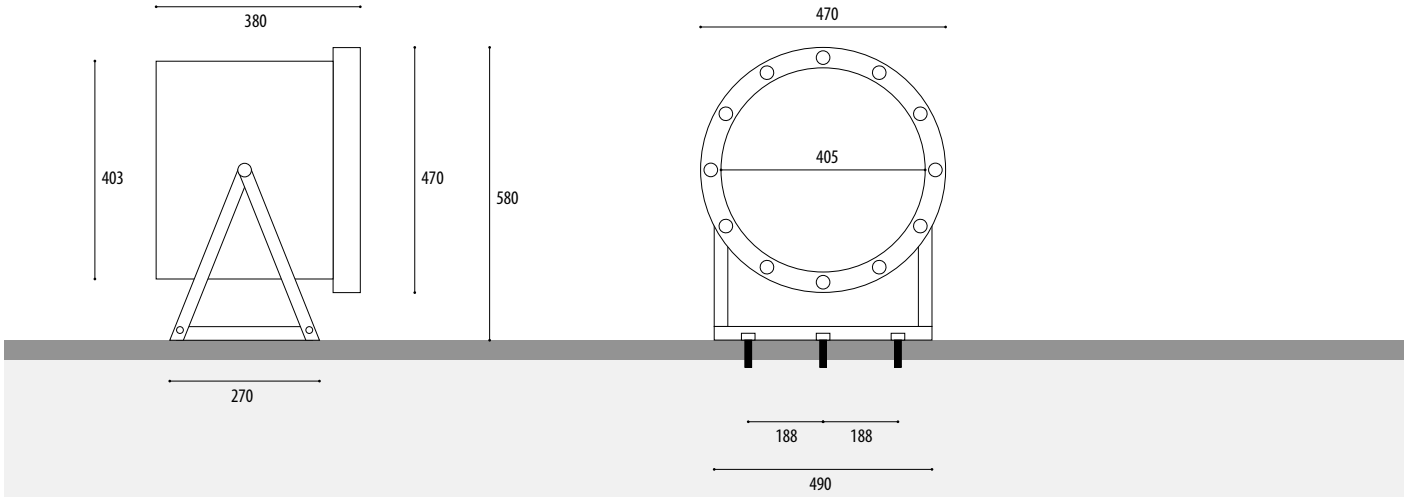

Article number	Lamps	V/mA	Socket	Light-current	Wattage	Cable, installs	[V]
VERSIONS: UNDER- AND OVERWATER OPERATION (ACCORDING TO PRIOR AGREEMENT)							
FLOOD							
4.2202.00.00	HIT (E40)	250W	230V	E40	21.000lm	Si, 3x2,5 qmm	M14
SPOT							
4.2202.10.00	HIT-DE	250W	230V	Fc2	22.000	Si, 3x2,5 qmm	J20
VERSIONS: ONLY UNDERWATER OPERATION							
FLOOD							
4.2204.00.00	HIT (E40)	400W	230V	E40	42.000lm	Si, 3x2,5 qmm	M15
4.2206.00.00	HIT-DE	1000W	230V	Kabel	90.000lm	Si, 3x2,5 qmm	M16
SPOT							
4.2204.10.00	HIT-DE	400W	230V	Fc2	36.000	Si, 3x2,5 qmm	J21

IP68 | UNDERWATER | EXTERIOR

< Project
Lets Sink, Lunz am See, Switzerland
"sub lumina", Lightinstallation for Show "LETS SINK"
in Lunz am See, Katharina Gruzei, 2013;
Photo & Copyright: Katharina Gruzei

Power supplies	Technical details see from page 234.
Integrated	
Integrated	
Integrated	
Integrated	
Integrated	

NOTE

180°

pivoting/standing frame inclusive

OPTIONS

Coloured HIT light sources available

POW-LED

POW-LED on request

SURFACE SPOTLIGHT 4.4110

UNDERWATER | EXTERIOR | IP68

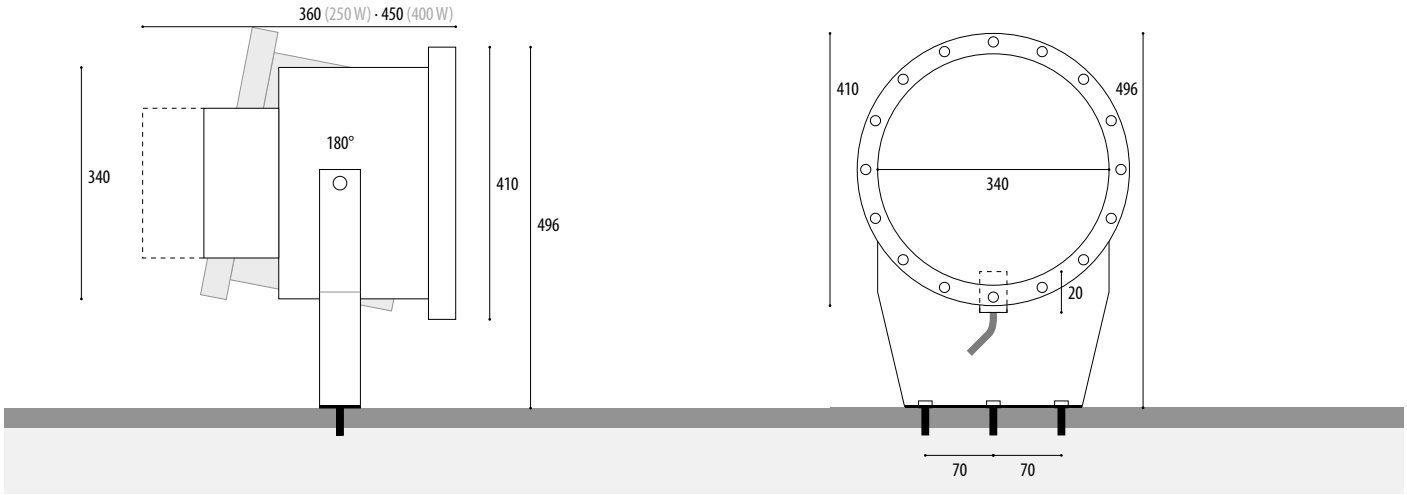

Article number	Lamps	Wattage	Current/Voltage	Socket	Radation angle	Cable	[V]
VERSIONS: UNDER- AND OVERWATER OPERATION (ACCORDING TO PRIOR AGREEMENT)							
FLOOD							
4.4110.00.25	HIE	250W	230V	E40	80°	Si, 3x2,5 qmm	L76
4.4110.00.26	HSE-MF	250W	230V	E40	80°	Si, 3x2,5 qmm	R75
SPOT							
4.4110.00.29	HIT-DE	250W	230V	Fc2	16°	Si, 3x2,5 qmm	J20
4.4110.00.30	HST-DE	250W	230V	Fc2	20°	Si, 3x2,5 qmm	Q20
VERSIONS: ONLY UNDERWATER OPERATION							
FLOOD							
4.4110.00.40	HSE-MF	400W	230V	E40	80°	Si, 3x2,5 qmm	R76
4.4110.00.41	HIE	400W	230V	E40	80°	Si, 3x2,5 qmm	L77
SPOT							
4.4110.00.43	HIT-DE	400W	230V	Fc2	35°	Si, 3x2,5 qmm	J21
4.4110.00.44	HST-DE	400W	230V	Fc2	35°	Si, 3x2,5 qmm	Q21

4.4110 | SURFACE-SPOTLIGHT

FOR ILLUMINATION OF WIDE AND HIGH FOUNTAINS.

IP68 | STAINLESS STEEL V4A 1.4571 316Ti | 230 V | max 3m | 180° | CABLE EXCL. | EXCL. | CE

· Protection class IP68 – up to 3m water depth
· Entirely made of stainless steel 316Ti 1.4571
· Mounting bracket adjustable through 180°
...
· Metal halogen vapour lamps
· with a symmetrical stainless steel reflector
...
· Cable gland PG16/21, marine grade 316Ti stainless steel
· Temperature-resistant silicon seal
· Toughened safety glass
· Ballast and Ignitor fitted depending on type, without light source

Power supplies	Technical details see from page 234.
	Integrated
	Integrated
	Integrated
	Integrated
	Integrated
	Integrated
	Integrated
	Integrated

OPTIONS

Coloured HIT light sources available

POW-LED

POW-LED on request

ADDITIONAL PARTS

double cable gland
made of V4A-stainless steel
4.0004.40.16

anti-glare louver

4.0008.01.00

glass disc, frosted
for softer light distribution
(light loss approx. -15%)
4.0085.01.00

B-L

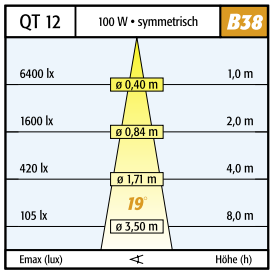
QT 12
100 W • symmetrisch
B38
6400 lx
ø 0,40 m
1,0 m
1600 lx
ø 0,84 m
2,0 m
420 lx
ø 1,71 m
4,0 m
105 lx
19°
ø 3,50 m
8,0 m
Emax (lux)
Höhe (h)

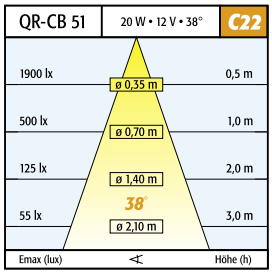
QR-CB 51
20 W • 12 V • 38°
C22
1900 lx
ø 0,35 m
0,5 m
500 lx
ø 0,70 m
1,0 m
125 lx
ø 1,40 m
2,0 m
55 lx
38°
ø 2,10 m
3,0 m
Emax (lux)
Höhe (h)

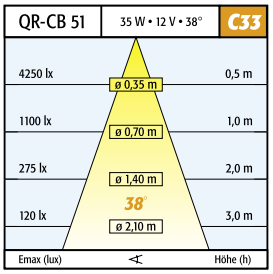
QR-CB 51
35 W • 12 V • 38°
C33
4250 lx
ø 0,35 m
0,5 m
1100 lx
ø 0,70 m
1,0 m
275 lx
ø 1,40 m
2,0 m
120 lx
38°
ø 2,10 m
3,0 m
Emax (lux)
Höhe (h)

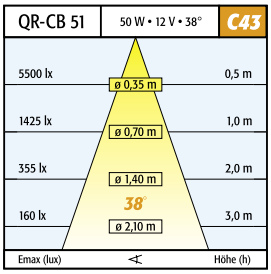
QR-CB 51
50 W • 12 V • 38°
C43
5500 lx
ø 0,35 m
0,5 m
1425 lx
ø 0,70 m
1,0 m
355 lx
ø 1,40 m
2,0 m
160 lx
38°
ø 2,10 m
3,0 m
Emax (lux)
Höhe (h)

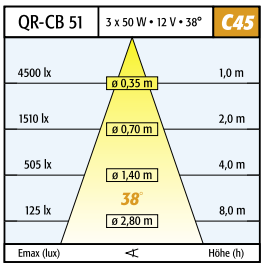
QR-CB 51
3 x 50 W • 12 V • 38°
C45
4500 lx
ø 0,35 m
1,0 m
1510 lx
ø 0,70 m
2,0 m
505 lx
ø 1,40 m
4,0 m
125 lx
38°
ø 2,80 m
8,0 m
Emax (lux)
Höhe (h)

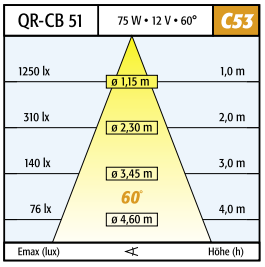
QR-CB 51
75 W • 12 V • 60°
C53
1250 lx
ø 1,15 m
1,0 m
310 lx
ø 2,30 m
2,0 m
140 lx
ø 3,45 m
3,0 m
76 lx
60°
ø 4,60 m
4,0 m
Emax (lux)
Höhe (h)

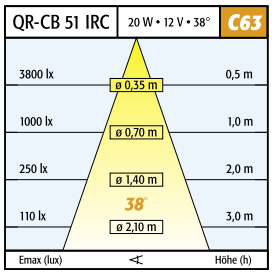
QR-CB 51 IRC
20 W • 12 V • 38°
C63
3800 lx
ø 0,35 m
0,5 m
1000 lx
ø 0,70 m
1,0 m
250 lx
ø 1,40 m
2,0 m
110 lx
38°
ø 2,10 m
3,0 m
Emax (lux)
Höhe (h)

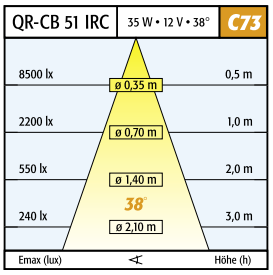
QR-CB 51 IRC
35 W • 12 V • 38°
C73
8500 lx
ø 0,35 m
0,5 m
2200 lx
ø 0,70 m
1,0 m
550 lx
ø 1,40 m
2,0 m
240 lx
38°
ø 2,10 m
3,0 m
Emax (lux)
Höhe (h)

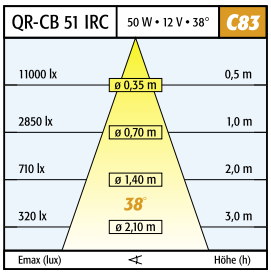
QR-CB 51 IRC
50 W • 12 V • 38°
C83
11000 lx
ø 0,35 m
0,5 m
2850 lx
ø 0,70 m
1,0 m
710 lx
ø 1,40 m
2,0 m
320 lx
38°
ø 2,10 m
3,0 m
Emax (lux)
Höhe (h)

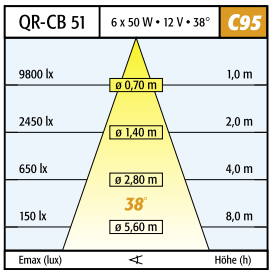
QR-CB 51
6 x 50 W • 12 V • 38°
C95
9800 lx
ø 0,70 m
1,0 m
2450 lx
ø 1,40 m
2,0 m
650 lx
ø 2,80 m
4,0 m
150 lx
38°
ø 5,60 m
8,0 m
Emax (lux)
Höhe (h)

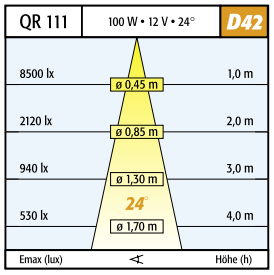
QR 111
100 W • 12 V • 24°
D42
8500 lx
ø 0,45 m
1,0 m
2120 lx
ø 0,85 m
2,0 m
940 lx
ø 1,30 m
3,0 m
530 lx
24°
ø 1,70 m
4,0 m
Emax (lux)
Höhe (h)

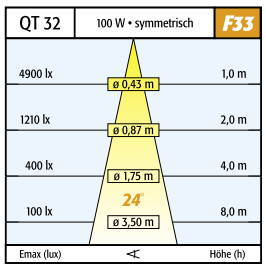
QT 32
100 W • symmetrisch
F33
4900 lx
ø 0,43 m
1,0 m
1210 lx
ø 0,87 m
2,0 m
400 lx
ø 1,75 m
4,0 m
100 lx
24°
ø 3,50 m
8,0 m
Emax (lux)
Höhe (h)

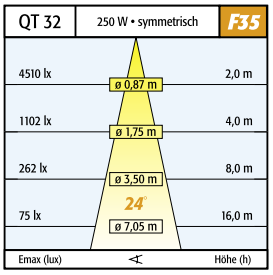
QT 32
250 W • symmetrisch
F35
4510 lx
ø 0,87 m
2,0 m
1102 lx
ø 1,75 m
4,0 m
262 lx
ø 3,50 m
8,0 m
75 lx
24°
ø 7,05 m
16,0 m
Emax (lux)
Höhe (h)

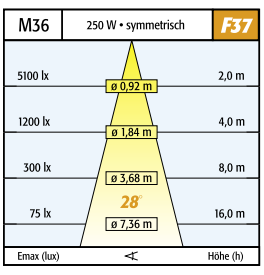
M36
250 W • symmetrisch
F37
5100 lx
ø 0,92 m
2,0 m
1200 lx
ø 1,84 m
4,0 m
300 lx
ø 3,68 m
8,0 m
75 lx
28°
ø 7,36 m
16,0 m
Emax (lux)
Höhe (h)

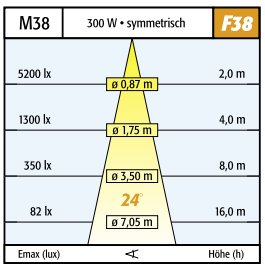
M38
300 W • symmetrisch
F38
5200 lx
ø 0,87 m
2,0 m
1300 lx
ø 1,75 m
4,0 m
350 lx
ø 3,50 m
8,0 m
82 lx
24°
ø 7,05 m
16,0 m
Emax (lux)
Höhe (h)

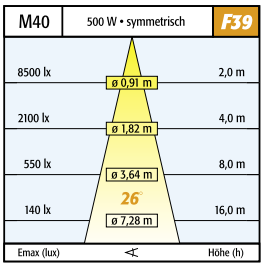
M40
500 W • symmetrisch
F39
8500 lx
ø 0,91 m
2,0 m
2100 lx
ø 1,82 m
4,0 m
550 lx
ø 3,64 m
8,0 m
140 lx
26°
ø 7,28 m
16,0 m
Emax (lux)
Höhe (h)

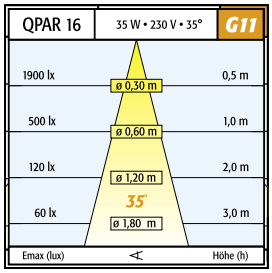
QPAR 16
35 W • 230 V • 35°
G11
1900 lx
ø 0,30 m
0,5 m
500 lx
ø 0,60 m
1,0 m
120 lx
ø 1,20 m
2,0 m
60 lx
35°
ø 1,80 m
3,0 m
Emax (lux)
Höhe (h)

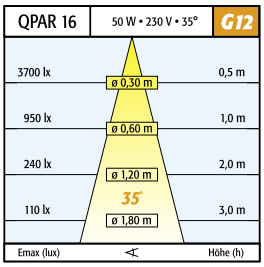
QPAR 16
50 W • 230 V • 35°
G12
3700 lx
ø 0,30 m
0,5 m
950 lx
ø 0,60 m
1,0 m
240 lx
ø 1,20 m
2,0 m
110 lx
35°
ø 1,80 m
3,0 m
Emax (lux)
Höhe (h)

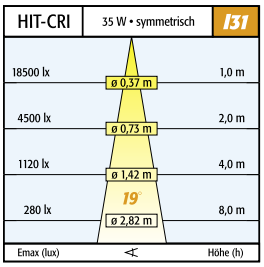
HIT-CRI
35 W • symmetrisch
I31
18500 lx
ø 0,37 m
1,0 m
4500 lx
ø 0,73 m
2,0 m
1120 lx
ø 1,42 m
4,0 m
280 lx
19°
ø 2,82 m
8,0 m
Emax (lux)
Höhe (h)

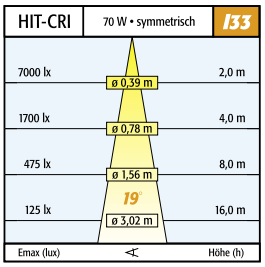
HIT-CRI
70 W • symmetrisch
I33
7000 lx
ø 0,39 m
2,0 m
1700 lx
ø 0,78 m
4,0 m
475 lx
ø 1,56 m
8,0 m
125 lx
19°
ø 3,02 m
16,0 m
Emax (lux)
Höhe (h)

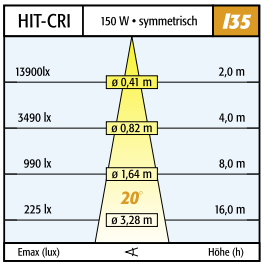
HIT-CRI
150 W • symmetrisch
I35
13900lx
ø 0,41 m
2,0 m
3490 lx
ø 0,82 m
4,0 m
990 lx
ø 1,64 m
8,0 m
225 lx
20°
ø 3,28 m
16,0 m
Emax (lux)
Höhe (h)

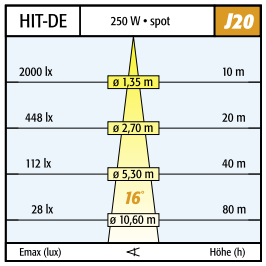
HIT-DE
250 W • spot
J20
2000 lx
ø 1,35 m
10 m
448 lx
ø 2,70 m
20 m
112 lx
ø 5,30 m
40 m
28 lx
16°
ø 10,60 m
80 m
Emax (lux)
Höhe (h)

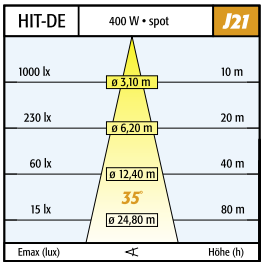
HIT-DE
400 W • spot
J21
1000 lx
ø 3,10 m
10 m
230 lx
ø 6,20 m
20 m
60 lx
ø 12,40 m
40 m
15 lx
35°
ø 24,80 m
80 m
Emax (lux)
Höhe (h)

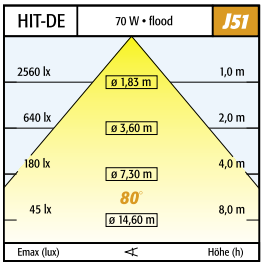
HIT-DE
70 W • flood
J51
2560 lx
ø 1,83 m
1,0 m
640 lx
ø 3,60 m
2,0 m
180 lx
ø 7,30 m
4,0 m
45 lx
80°
ø 14,60 m
8,0 m
Emax (lux)
Höhe (h)

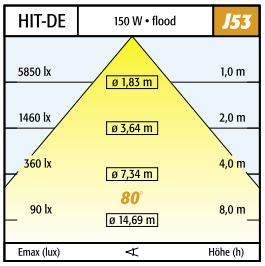
HIT-DE
150 W • flood
J53
5850 lx
ø 1,83 m
1,0 m
1460 lx
ø 3,64 m
2,0 m
360 lx
ø 7,34 m
4,0 m
90 lx
80°
ø 14,69 m
8,0 m
Emax (lux)
Höhe (h)

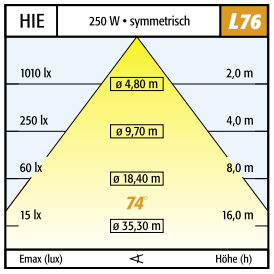
HIE
250 W • symmetrisch
L76
1010 lx
ø 4,80 m
2,0 m
250 lx
ø 9,70 m
4,0 m
60 lx
ø 18,40 m
8,0 m
15 lx
74°
ø 35,30 m
16,0 m
Emax (lux)
Höhe (h)

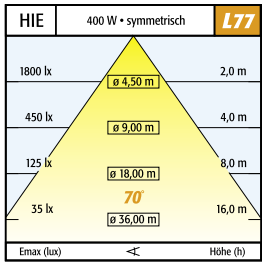
HIE
400 W • symmetrisch
L77
1800 lx
ø 4,50 m
2,0 m
450 lx
ø 9,00 m
4,0 m
125 lx
ø 18,00 m
8,0 m
35 lx
70°
ø 36,00 m
16,0 m
Emax (lux)
Höhe (h)

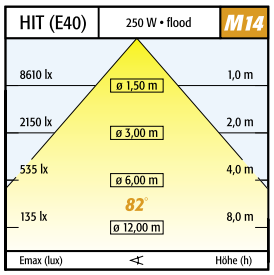
HIT (E40)
250 W • flood
M14
8610 lx
ø 1,50 m
1,0 m
2150 lx
ø 3,00 m
2,0 m
535 lx
ø 6,00 m
4,0 m
82°
135 lx
ø 12,00 m
8,0 m
Emax (lux)
Höhe (h)

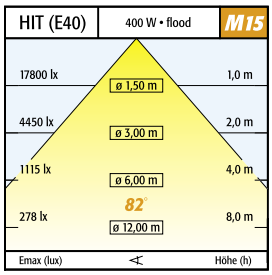
HIT (E40)
400 W • flood
M15
17800 lx
ø 1,50 m
1,0 m
4450 lx
ø 3,00 m
2,0 m
1115 lx
ø 6,00 m
4,0 m
82°
278 lx
ø 12,00 m
8,0 m
Emax (lux)
Höhe (h)

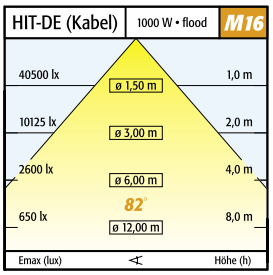
HIT-DE (Kabel)
1000 W • flood
M16
40500 lx
ø 1,50 m
1,0 m
10125 lx
ø 3,00 m
2,0 m
2600 lx
ø 6,00 m
4,0 m
82°
650 lx
ø 12,00 m
8,0 m
Emax (lux)
Höhe (h)

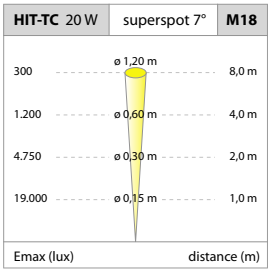
HIT-TC 20 W
superspot 7°
M18
300
ø 1,20 m
8,0 m
1.200
ø 0,60 m
4,0 m
4.750
ø 0,30 m
2,0 m
19.000
ø 0,15 m
1,0 m
Emax (lux)
distance (m)

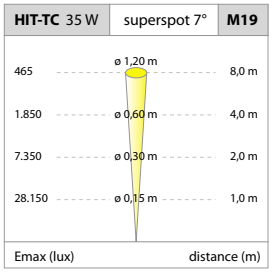
HIT-TC 35 W
superspot 7°
M19
465
ø 1,20 m
8,0 m
1.850
ø 0,60 m
4,0 m
7.350
ø 0,30 m
2,0 m
28.150
ø 0,15 m
1,0 m
Emax (lux)
distance (m)

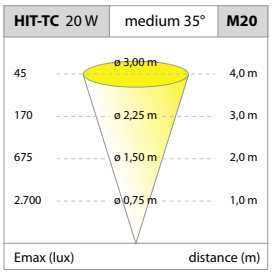
HIT-TC 20 W
medium 35°
M20
45
ø 3,00 m
4,0 m
170
ø 2,25 m
3,0 m
675
ø 1,50 m
2,0 m
2.700
ø 0,75 m
1,0 m
Emax (lux)
distance (m)

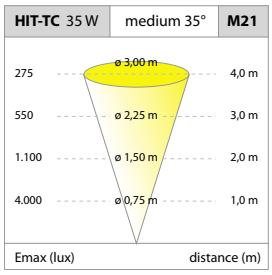
HIT-TC 35 W
medium 35°
M21
275
ø 3,00 m
4,0 m
550
ø 2,25 m
3,0 m
1.100
ø 1,50 m
2,0 m
4.000
ø 0,75 m
1,0 m
Emax (lux)
distance (m)

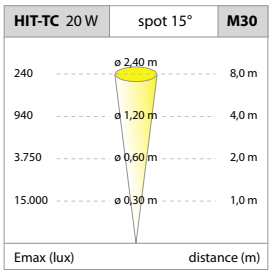
HIT-TC 20 W
spot 15°
M30
240
ø 2,40 m
8,0 m
940
ø 1,20 m
4,0 m
3.750
ø 0,60 m
2,0 m
15.000
ø 0,30 m
1,0 m
Emax (lux)
distance (m)

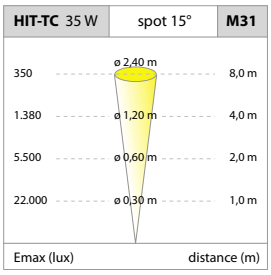
HIT-TC 35 W
spot 15°
M31
350
ø 2,40 m
8,0 m
1.380
ø 1,20 m
4,0 m
5.500
ø 0,60 m
2,0 m
22.000
ø 0,30 m
1,0 m
Emax (lux)
distance (m)

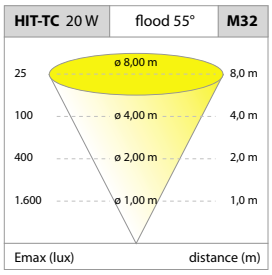
HIT-TC 20 W
flood 55°
M32
25
ø 8,00 m
8,0 m
100
ø 4,00 m
4,0 m
400
ø 2,00 m
2,0 m
1.600
ø 1,00 m
1,0 m
Emax (lux)
distance (m)

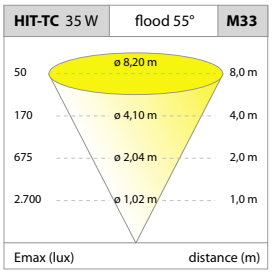
HIT-TC 35 W
flood 55°
M33
50
ø 8,20 m
8,0 m
170
ø 4,10 m
4,0 m
675
ø 2,04 m
2,0 m
2.700
ø 1,02 m
1,0 m
Emax (lux)
distance (m)

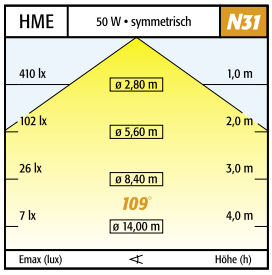
HME
50 W • symmetrisch
N31
410 lx
ø 2,80 m
1,0 m
102 lx
ø 5,60 m
2,0 m
26 lx
ø 8,40 m
3,0 m
109°
7 lx
ø 14,00 m
4,0 m
Emax (lux)
Höhe (h)

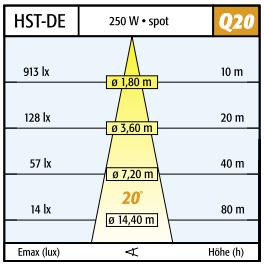
HST-DE
250 W • spot
Q20
913 lx
ø 1,80 m
10 m
128 lx
ø 3,60 m
20 m
57 lx
ø 7,20 m
40 m
20°
14 lx
ø 14,40 m
80 m
Emax (lux)
Höhe (h)

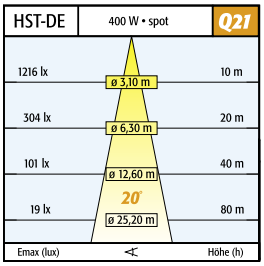
HST-DE
400 W • spot
Q21
1216 lx
ø 3,10 m
10 m
304 lx
ø 6,30 m
20 m
101 lx
ø 12,60 m
40 m
20°
19 lx
ø 25,20 m
80 m
Emax (lux)
Höhe (h)

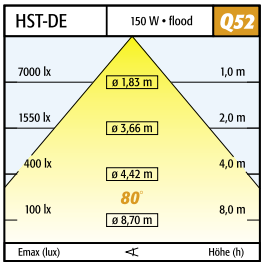
HST-DE
150 W • flood
Q52
7000 lx
ø 1,83 m
1,0 m
1550 lx
ø 3,66 m
2,0 m
400 lx
ø 4,42 m
4,0 m
80°
100 lx
ø 8,70 m
8,0 m
Emax (lux)
Höhe (h)

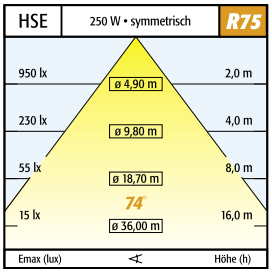
HSE
250 W • symmetrisch
R75
950 lx
ø 4,90 m
2,0 m
230 lx
ø 9,80 m
4,0 m
55 lx
ø 18,70 m
8,0 m
74°
15 lx
ø 36,00 m
16,0 m
Emax (lux)
Höhe (h)

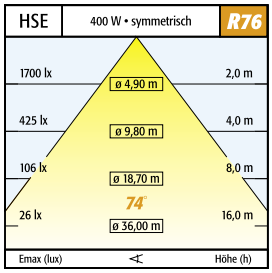
HSE
400 W • symmetrisch
R76
1700 lx
ø 4,90 m
2,0 m
425 lx
ø 9,80 m
4,0 m
106 lx
ø 18,70 m
8,0 m
74°
26 lx
ø 36,00 m
16,0 m
Emax (lux)
Höhe (h)

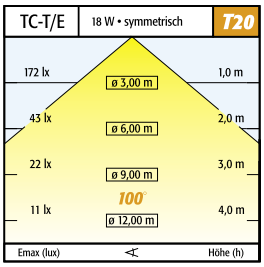
TC-T/E
18 W • symmetrisch
T20
172 lx
ø 3,00 m
1,0 m
43 lx
ø 6,00 m
2,0 m
22 lx
ø 9,00 m
3,0 m
100°
11 lx
ø 12,00 m
4,0 m
Emax (lux)
Höhe (h)

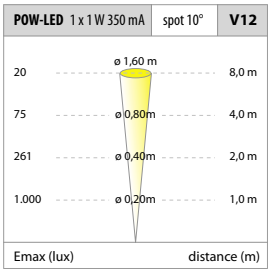
POW-LED 1 x 1 W 350 mA
spot 10°
V12
20
ø 1,60 m
8,0 m
75
ø 0,80m
4,0 m
261
ø 0,40m
2,0 m
1.000
ø 0,20m
1,0 m
Emax (lux)
distance (m)

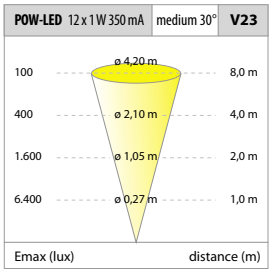
POW-LED 12 x 1 W 350 mA
medium 30°
V23
100
ø 4,20 m
8,0 m
400
ø 2,10 m
4,0 m
1.600
ø 1,05 m
2,0 m
6.400
ø 0,27 m
1,0 m
Emax (lux)
distance (m)

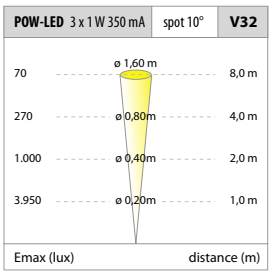
POW-LED 3 x 1 W 350 mA
spot 10°
V32
70
ø 1,60 m
8,0 m
270
ø 0,80m
4,0 m
1.000
ø 0,40m
2,0 m
3.950
ø 0,20m
1,0 m
Emax (lux)
distance (m)

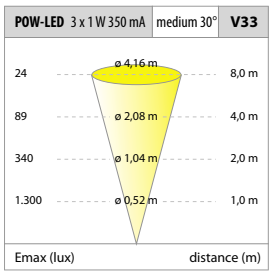
POW-LED 3 x 1 W 350 mA
medium 30°
V33
24
ø 4,16 m
8,0 m
89
ø 2,08 m
4,0 m
340
ø 1,04 m
2,0 m
1.300
ø 0,52 m
1,0 m
Emax (lux)
distance (m)

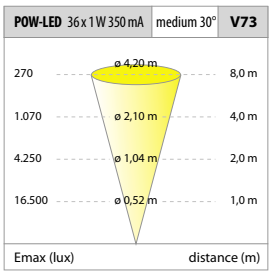
POW-LED 36 x 1 W 350 mA
medium 30°
V73
270
ø 4,20 m
8,0 m
1.070
ø 2,10 m
4,0 m
4.250
ø 1,04 m
2,0 m
16.500
ø 0,52 m
1,0 m
Emax (lux)
distance (m)

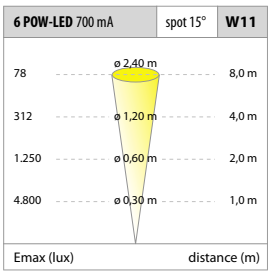
6 POW-LED 700 mA
spot 15°
W11
78
ø 2,40 m
8,0 m
312
ø 1,20 m
4,0 m
1.250
ø 0,60 m
2,0 m
4.800
ø 0,30 m
1,0 m
Emax (lux)
distance (m)

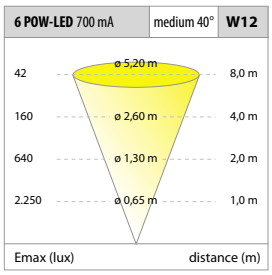
6 POW-LED 700 mA
medium 40°
W12
42
ø 5,20 m
8,0 m
160
ø 2,60 m
4,0 m
640
ø 1,30 m
2,0 m
2.250
ø 0,65 m
1,0 m
Emax (lux)
distance (m)

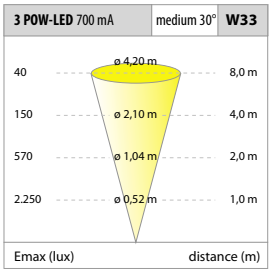
3 POW-LED 700 mA
medium 30°
W33
40
ø 4,20 m
8,0 m
150
ø 2,10 m
4,0 m
570
ø 1,04 m
2,0 m
2.250
ø 0,52 m
1,0 m
Emax (lux)
distance (m)

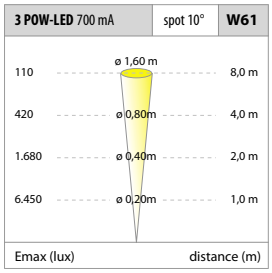
3 POW-LED 700 mA
spot 10°
W61
110
ø 1,60 m
8,0 m
420
ø 0,80m
4,0 m
1.680
ø 0,40m
2,0 m
6.450
ø 0,20m
1,0 m
Emax (lux)
distance (m)

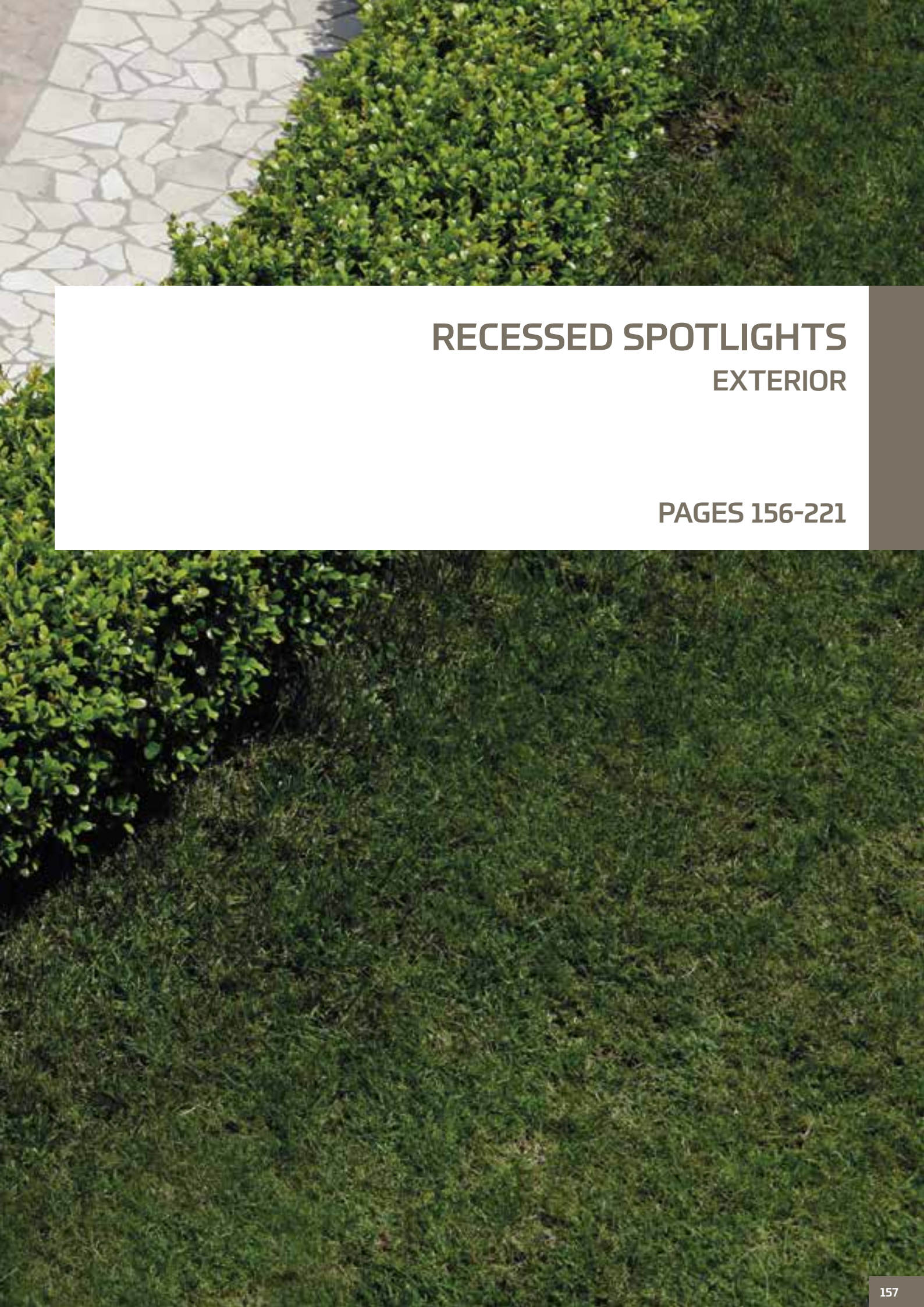

RECESSED SPOTLIGHTS

EXTERIOR

PAGES 156-221

RECESSED SPOTLIGHT
4.0011

EXTERIOR | IP67

- Miniature spotlight for effect illumination
- Very low energy consumption
- Simple installation using installation sleeve provided

4.0011 | 4.0010 | RECESSED SPOTLIGHT

FOR ILLUMINATION AND ORIENTATION FOR FACADES, TERRACE, WAYS AND GARDENS.

IP67 | STAINLESS STEEL V4A 1.4571 316Ti | ALU | POW-LED INCL. | 3.000 K 4.500 K 6.000 K COLOR | CONSTANT CURRENT KONSTANT STROM | DALI 1-10 V OPTIONAL DIMM | 650kg | CABLE INCL. | CE | III

· Protection system IP67
· cover made of stainless steel 316Ti
· Housing made of anodised aluminium
· Flush-mounted cover, round or square cover
· Toughened safety glass (ESG) – withstands loads of up to 650 kg
...
· POW-LED cold white, warm white, neutral white
· POW-LED colored
· operating mode: constant current
...
· For floor and wall installation with aluminium installation sleeve
· Supplied with installation sleeve and 3 m of connecting cable

PRODUCT LINE

4.0012
Recessed spotlights (underwater)
> Page 92

4.0011.15
Surface spotlights
> Page 118

< Project
Conrad Maldives Rangali Island, Maldives
Bo Steiber Lighting Design

RECESSED SPOTLIGHT 4.0011

EXTERIOR | IP67

Installation sleeve

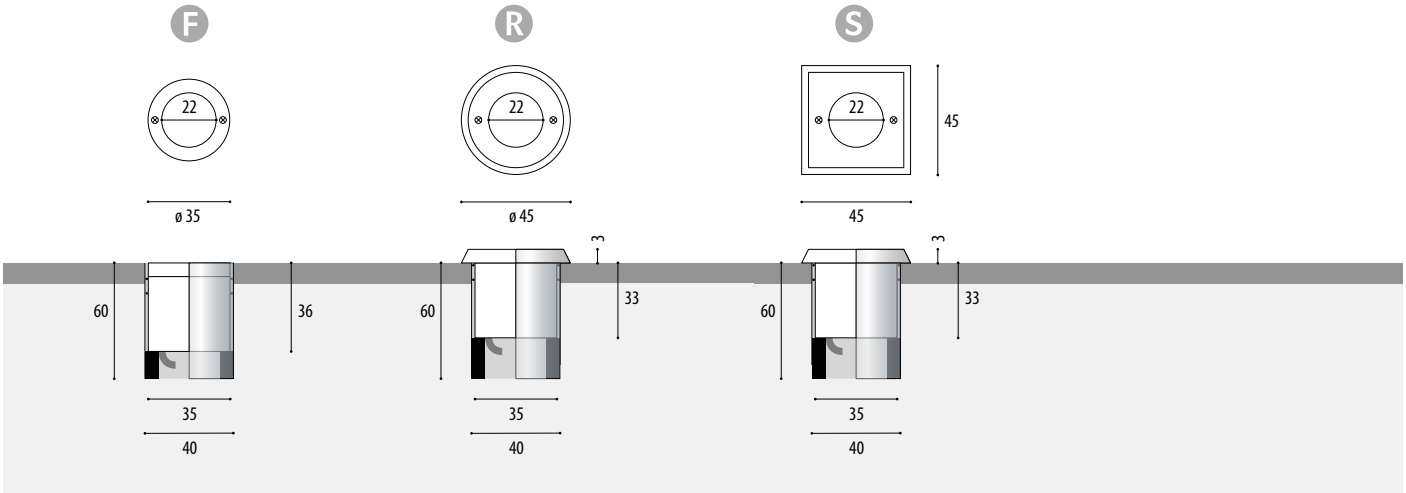

F Article number	R Article number	S Article number	Lamps	Lumen	Light colour	Wattage	Current	Temperature	Radation angle	Cable, installs	[V]
RADATION ANGLE 10°(SPOT)											
4.0011.10.01	**4.0011.20.01**	**4.0011.40.01**	1 POW-LED	165 lm	6000K cold white	total 2 W	CC 350 mA	<40°C	10° spot	UW, 2x0,5 qmm	V12
4.0011.10.02	**4.0011.20.02**	**4.0011.40.02**	1 POW-LED	135 lm	3000K warm white	total 2 W	CC 350 mA	<40°C	10° spot	UW, 2x0,5 qmm	
4.0011.10.03	**4.0011.20.03**	**4.0011.40.03**	1 POW-LED	155 lm	4500K neutral white	total 2 W	CC 350 mA	<40°C	10° spot	UW, 2x0,5 qmm	
4.0011.10.04	**4.0011.20.04**	**4.0011.40.04**	1 POW-LED		yellow	total 2 W	CC 350 mA	<40°C	10° spot	UW, 2x0,5 qmm	
4.0011.10.05	**4.0011.20.05**	**4.0011.40.05**	1 POW-LED		red	total 2 W	CC 350 mA	<40°C	10° spot	UW, 2x0,5 qmm	
4.0011.10.06	**4.0011.20.06**	**4.0011.40.06**	1 POW-LED		blue	total 2 W	CC 350 mA	<40°C	10° spot	UW, 2x0,5 qmm	
4.0011.10.07	**4.0011.20.07**	**4.0011.40.07**	1 POW-LED		green	total 2 W	CC 350 mA	<40°C	10° spot	UW, 2x0,5 qmm	
RADATION ANGLE HOMOGEN DIFFUS											
4.0010.10.01	**4.0010.20.01**	**4.0010.40.01**	1 POW-LED	165 lm	6000K cold white	total 2 W	CC 350 mA	<40°C	homogen diffus	UW, 2x0,5 qmm	
4.0010.10.02	**4.0010.20.02**	**4.0010.40.02**	1 POW-LED	135 lm	3000K warm white	total 2 W	CC 350 mA	<40°C	homogen diffus	UW, 2x0,5 qmm	
4.0010.10.03	**4.0010.20.03**	**4.0010.40.03**	1 POW-LED	155 lm	4500K neutral white	total 2 W	CC 350 mA	<40°C	homogen diffus	UW, 2x0,5 qmm	
4.0010.10.04	**4.0010.20.04**	**4.0010.40.04**	1 POW-LED		yellow	total 2 W	CC 350 mA	<40°C	homogen diffus	UW, 2x0,5 qmm	
4.0010.10.05	**4.0010.20.05**	**4.0010.40.05**	1 POW-LED		red	total 2 W	CC 350 mA	<40°C	homogen diffus	UW, 2x0,5 qmm	
4.0010.10.06	**4.0010.20.06**	**4.0010.40.06**	1 POW-LED		blue	total 2 W	CC 350 mA	<40°C	homogen diffus	UW, 2x0,5 qmm	
4.0010.10.07	**4.0010.20.07**	**4.0010.40.07**	1 POW-LED		green	total 2 W	CC 350 mA	<40°C	homogen diffus	UW, 2x0,5 qmm	

IP67 EXTERIOR

< Project
Stadtbrücke Wolfsburg, Germany

Power supplies Technical details see from page 234.

5.0635.65.03	Constant Current power supply, max 3 spotlights	5.0635.65.10	Constant Current power supply, max 6 spotlights	5.0635.65.20	Constant Current power supply, max 12 spotlights
5.0635.65.03		5.0635.65.10		5.0635.65.20	
5.0635.65.03		5.0635.65.10		5.0635.65.20	
5.0635.65.03		5.0635.65.10		5.0635.65.20	
5.0635.65.03		5.0635.65.10		5.0635.65.20	
5.0635.65.03		5.0635.65.10		5.0635.65.20	
5.0635.65.03		5.0635.65.10		5.0635.65.20	

5.0635.65.03	Constant Current power supply, max 3 spotlights	5.0635.65.10	Constant Current power supply, max 6 spotlights	5.0635.65.20	Constant Current power supply, max 12 spotlights
5.0635.65.03		5.0635.65.10		5.0635.65.20	
5.0635.65.03		5.0635.65.10		5.0635.65.20	
5.0635.65.03		5.0635.65.10		5.0635.65.20	
5.0635.65.03		5.0635.65.10		5.0635.65.20	
5.0635.65.03		5.0635.65.10		5.0635.65.20	
5.0635.65.03		5.0635.65.10		5.0635.65.20	

NOTE

POW-LED, series-connected

Glass surface temperature below 40° (Cool Contact)

OPTIONS

Possible beam angle

10° 30° 45° 90° 15x40°

STAINLESS STEEL V4A 1.4571 316Ti

marine grade 316L stainless steel housing on request

RECESSED SPOTLIGHT 4.0021

EXTERIOR | IP67

- Orientation light for standard mounting boxes
- Up to 165 lumen light intensity
- Round or square aperture

4.0021 | 4.0020 | RECESSED SPOTLIGHT

FOR ILLUMINATION AND ORIENTATION FOR FACADES, TERRACE, WAYS AND GARDENS.

IP67 | STAINLESS STEEL V4A 1.4571 316Ti | ALU | POW-LED INCL. | 3.000 K 4.500 K 6.000 K COLOR | CONSTANT CURRENT KONSTANT STROM | DALI 1-10 V OPTIONAL DIMM | 650kg | CABLE INCL. | CE | III

· Protection system IP67
· cover made of stainless steel 316Ti
· Housing made of anodised aluminium
· Round or square attachment cover, height 3mm
· Toughened safety glass (ESG) – withstands loads of up to 650 kg
...
· POW-LED cold white, warm white, neutral white
· POW-LED colored
· operating mode: constant current
...
· For floor installation with a plastic installation container
· Supplied with plastic installation container and 3 m of connecting cable

RECESSED SPOTLIGHT 4.0021

EXTERIOR | IP67

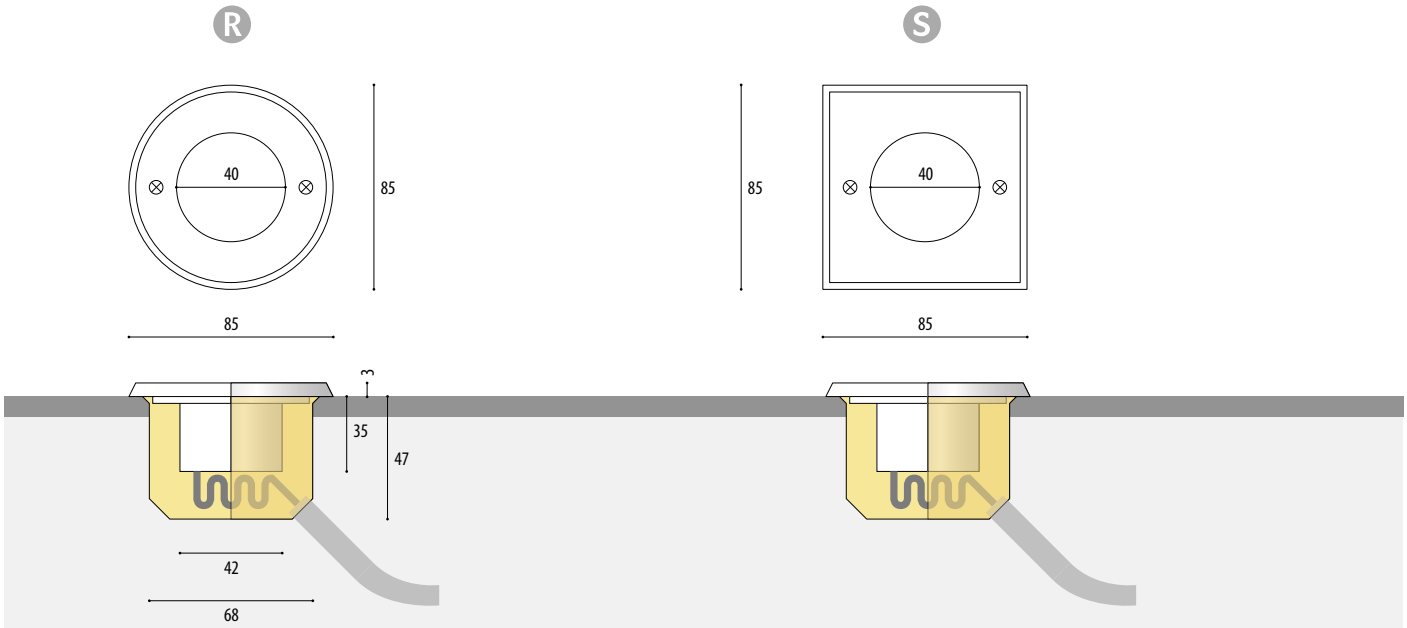

R Article number	S Article number	Lamps	Lumen	Light colour	Wattage	Current	Temperature	Radation angle	Cable, installs	[V]
RADATION ANGLE 30° (MEDIUM)										
4.0021.20.01	**4.0021.40.01**	1 POW-LED	165 lm	6000K cold white	total 2 W	CC 350 mA	<40°C	30° medium	UW, 2x0,5 qmm	V14
4.0021.20.02	**4.0021.40.02**	1 POW-LED	135 lm	3000K warm white	total 2 W	CC 350 mA	<40°C	30° medium	UW, 2x0,5 qmm	
4.0021.20.03	**4.0021.40.03**	1 POW-LED	155 lm	4500K neutral white	total 2 W	CC 350 mA	<40°C	30° medium	UW, 2x0,5 qmm	
4.0021.20.04	**4.0021.40.04**	1 POW-LED		yellow	total 2 W	CC 350 mA	<40°C	30° medium	UW, 2x0,5 qmm	
4.0021.20.05	**4.0021.40.05**	1 POW-LED		red	total 2 W	CC 350 mA	<40°C	30° medium	UW, 2x0,5 qmm	
4.0021.20.06	**4.0021.40.06**	1 POW-LED		blue	total 2 W	CC 350 mA	<40°C	30° medium	UW, 2x0,5 qmm	
4.0021.20.07	**4.0021.40.07**	1 POW-LED		green	total 2 W	CC 350 mA	<40°C	30° medium	UW, 2x0,5 qmm	
RADATION ANGLE HOMOGEN DIFFUS										
4.0020.20.01	**4.0020.40.01**	1 POW-LED	165 lm	6000K cold white	total 2 W	CC 350 mA	<40°C	homogen diffus	UW, 2x0,5 qmm	
4.0020.20.02	**4.0020.40.02**	1 POW-LED	135 lm	3000K warm white	total 2 W	CC 350 mA	<40°C	homogen diffus	UW, 2x0,5 qmm	
4.0020.20.03	**4.0020.40.03**	1 POW-LED	155 lm	4500K neutral white	total 2 W	CC 350 mA	<40°C	homogen diffus	UW, 2x0,5 qmm	
4.0020.20.04	**4.0020.40.04**	1 POW-LED		yellow	total 2 W	CC 350 mA	<40°C	homogen diffus	UW, 2x0,5 qmm	
4.0020.20.05	**4.0020.40.05**	1 POW-LED		red	total 2 W	CC 350 mA	<40°C	homogen diffus	UW, 2x0,5 qmm	
4.0020.20.06	**4.0020.40.06**	1 POW-LED		blue	total 2 W	CC 350 mA	<40°C	homogen diffus	UW, 2x0,5 qmm	
4.0020.20.07	**4.0020.40.07**	1 POW-LED		green	total 2 W	CC 350 mA	<40°C	homogen diffus	UW, 2x0,5 qmm	

RECESSED SPOTLIGHT 4.0021

IP67 | EXTERIOR

< Project
Australien War Memorial, Australia
Planner: Form & Light, Sydney;
Photo: www.kevinhawkinsphotography.com

Power supplies Technical details see from page 234.

5.0635.65.03	Constant Current power supply, max 3 spotlights	5.0635.65.10	Constant Current power supply, max 6 spotlights	5.0635.65.20	Constant Current power supply, max 12 spotlights
5.0635.65.03		5.0635.65.10		5.0635.65.20	
5.0635.65.03		5.0635.65.10		5.0635.65.20	
5.0635.65.03		5.0635.65.10		5.0635.65.20	
5.0635.65.03		5.0635.65.10		5.0635.65.20	
5.0635.65.03		5.0635.65.10		5.0635.65.20	
5.0635.65.03		5.0635.65.10		5.0635.65.20	

5.0635.65.03	Constant Current power supply, max 3 spotlights	5.0635.65.10	Constant Current power supply, max 6 spotlights	5.0635.65.20	Constant Current power supply, max 12 spotlights
5.0635.65.03		5.0635.65.10		5.0635.65.20	
5.0635.65.03		5.0635.65.10		5.0635.65.20	
5.0635.65.03		5.0635.65.10		5.0635.65.20	
5.0635.65.03		5.0635.65.10		5.0635.65.20	
5.0635.65.03		5.0635.65.10		5.0635.65.20	
5.0635.65.03		5.0635.65.10		5.0635.65.20	

NOTE

POW-LED, series-connected

Glass surface temperature below 40° (Cool Contact)

OPTIONS

Possible beam angle

10° | 30° | 45° | 90° | 15x40°

RECESSED SPOTLIGHT
4.0026

EXTERIOR | IP67

- Mounting spotlight for standard mounting boxes
- Up to 495 lumen light intensity
- Large light emission of ø 50 mm

4.0026 | 4.0025 | RECESSED SPOTLIGHT

FOR ILLUMINATION AND ORIENTATION FOR FACADES, TERRACE, WAYS AND GARDENS.

IP67 | STAINLESS STEEL V4A 1.4571 316Ti | ALU | POW-LED INCL. | 3.000 K 4.500 K 6.000 K COLOR | CONSTANT CURRENT KONSTANT STROM | DALI 1-10 V OPTIONAL DIMM | 650kg | CABLE INCL. | CE | III

· Protection system IP67
· cover made of stainless steel 316Ti
· Housing made of anodised aluminium
· Round or square attachment cover, height 3mm
· Toughened safety glass (ESG) – withstands loads of up to 650 kg
...
· POW-LED cold white, warm white, neutral white
· POW-LED colored
· POW-LED RGB
· operating mode: constant current
...
· For floor installation with a plastic installation container
· Supplied with plastic installation container and 3 m of connecting cable

< Project
Iglootel, Arvidsjaur, Sweden, www.iglootel.com
Planner: www.lichtteam.de

RECESSED SPOTLIGHT 4.0026

EXTERIOR | IP67

Installation container

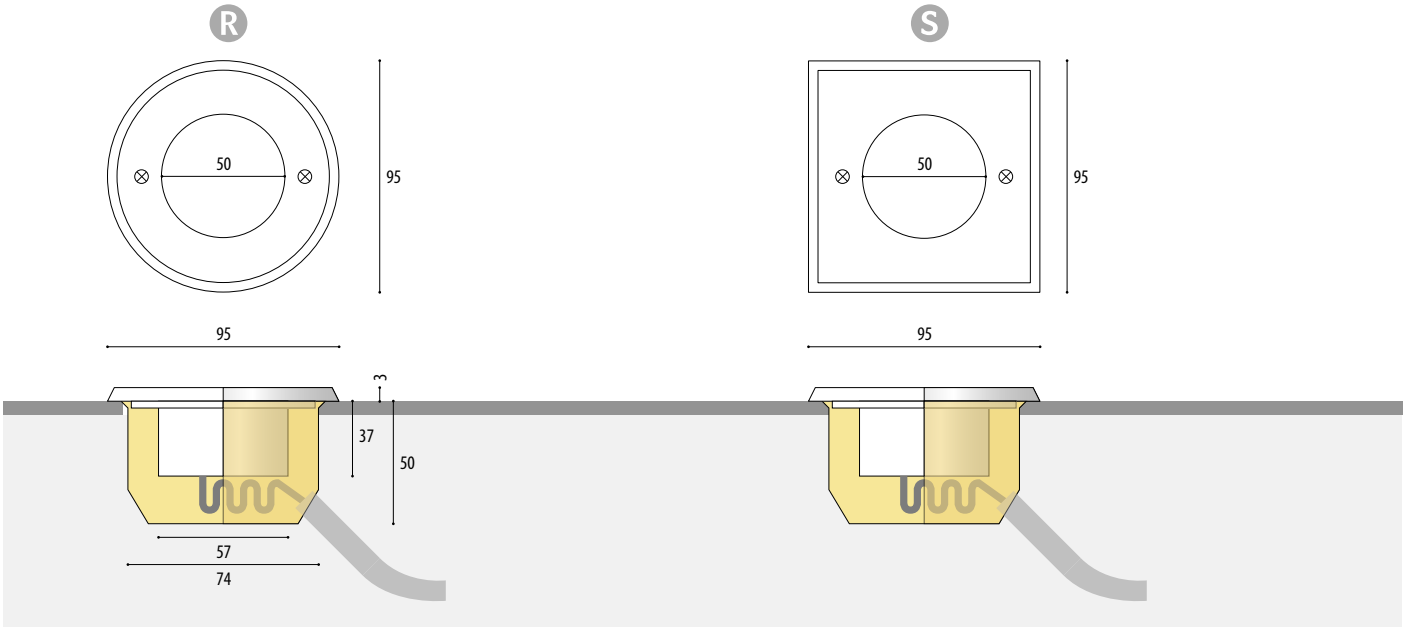

R Article number	S Article number	Lamps	Lumen	Light colour	Wattage	Current	Temperature	Radation angle	Cable, installs	[V]
RADIATION ANGLE 10°(SPOT)										
4.0026.20.01	**4.0026.40.01**	3 POW-LED	495 lm	6000K cold white	total 5 W	CC 350 mA	<40°C	10° spot	UW, 2x0,5 qmm	V32
4.0026.20.02	**4.0026.40.02**	3 POW-LED	405 lm	3000K warm white	total 5 W	CC 350 mA	<40°C	10° spot	UW, 2x0,5 qmm	
4.0026.20.03	**4.0026.40.03**	3 POW-LED	465 lm	4500K neutral white	total 5 W	CC 350 mA	<40°C	10° spot	UW, 2x0,5 qmm	
4.0026.20.04	**4.0026.40.04**	3 POW-LED		yellow	total 5 W	CC 350 mA	<40°C	10° spot	UW, 2x0,5 qmm	
4.0026.20.05	**4.0026.40.05**	3 POW-LED		red	total 5 W	CC 350 mA	<40°C	10° spot	UW, 2x0,5 qmm	
4.0026.20.06	**4.0026.40.06**	3 POW-LED		blue	total 5 W	CC 350 mA	<40°C	10° spot	UW, 2x0,5 qmm	
4.0026.20.07	**4.0026.40.07**	3 POW-LED		green	total 5 W	CC 350 mA	<40°C	10° spot	UW, 2x0,5 qmm	
4.0026.20.09	**4.0026.40.09**	3 POW-LED		RGB	all on 5 W	CC 350 mA	<40°C	10° spot	UW, 6x0,5 qmm	
RADIATION ANGLE 30° (MEDIUM)										
4.0026.20.11	**4.0026.40.11**	3 POW-LED	495 lm	6000K cold white	total 5 W	CC 350 mA	<40°C	30° medium	UW, 2x0,5 qmm	V33
4.0026.20.12	**4.0026.40.12**	3 POW-LED	405 lm	3000K warm white	total 5 W	CC 350 mA	<40°C	30° medium	UW, 2x0,5 qmm	
4.0026.20.13	**4.0026.40.13**	3 POW-LED	465 lm	4500K neutral white	total 5 W	CC 350 mA	<40°C	30° medium	UW, 2x0,5 qmm	
4.0026.20.14	**4.0026.40.14**	3 POW-LED		yellow	total 5 W	CC 350 mA	<40°C	30° medium	UW, 2x0,5 qmm	
4.0026.20.15	**4.0026.40.15**	3 POW-LED		red	total 5 W	CC 350 mA	<40°C	30° medium	UW, 2x0,5 qmm	
4.0026.20.16	**4.0026.40.16**	3 POW-LED		blue	total 5 W	CC 350 mA	<40°C	30° medium	UW, 2x0,5 qmm	
4.0026.20.17	**4.0026.40.17**	3 POW-LED		green	total 5 W	CC 350 mA	<40°C	30° medium	UW, 2x0,5 qmm	
4.0026.20.19	**4.0026.40.19**	3 POW-LED		RGB	all on 5 W	CC 350 mA	<40°C	30° medium	UW, 6x0,5 qmm	
RADIATION ANGLE HOMOGEN DIFFUS										
4.0025.20.11	**4.0025.40.11**	1 POW-LED	165 lm	6000K cold white	total 2 W	CC 350 mA	<40°C	homogen diffus	UW, 2x0,5 qmm	
4.0025.20.12	**4.0025.40.12**	1 POW-LED	135 lm	3000K warm white	total 2 W	CC 350 mA	<40°C	homogen diffus	UW, 2x0,5 qmm	
4.0025.20.13	**4.0025.40.13**	1 POW-LED	155 lm	4500K neutral white	total 2 W	CC 350 mA	<40°C	homogen diffus	UW, 2x0,5 qmm	
4.0025.20.14	**4.0025.40.14**	1 POW-LED		yellow	total 2 W	CC 350 mA	<40°C	homogen diffus	UW, 2x0,5 qmm	
4.0025.20.15	**4.0025.40.15**	1 POW-LED		red	total 2 W	CC 350 mA	<40°C	homogen diffus	UW, 2x0,5 qmm	
4.0025.20.16	**4.0025.40.16**	1 POW-LED		blue	total 2 W	CC 350 mA	<40°C	homogen diffus	UW, 2x0,5 qmm	
4.0025.20.17	**4.0025.40.17**	1 POW-LED		green	total 2 W	CC 350 mA	<40°C	homogen diffus	UW, 2x0,5 qmm	
4.0025.20.19	**4.0025.40.19**	1 Multichip POW-LED		RGB	all on 5 W	CC 350 mA	<40°C	diffus	UW, 6x0,5 qmm	

IP67 | EXTERIOR

5.0635.65.03	Constant Current power supply, max 1 spotlights	5.0635.65.10	Constant Current power supply, max 2 spotlights	5.0635.65.20	Constant Current power supply, 2-4 spotlights
5.0635.65.03		5.0635.65.10		5.0635.65.20	
5.0635.65.03		5.0635.65.10		5.0635.65.20	
5.0635.65.03		5.0635.65.10		5.0635.65.20	
5.0635.65.03		5.0635.65.10		5.0635.65.20	
5.0635.65.03		5.0635.65.10		5.0635.65.20	
5.0635.65.03		5.0635.65.10		5.0635.65.20	
5.0635.09.16	RGB-Controller, max 4	5.0635.09.50	RGB-Controller, 5-12 spotlights		

5.0635.65.03	Constant Current power supply, max 1 spotlights	5.0635.65.10	Constant Current power supply, max 2 spotlights	5.0635.65.20	Constant Current power supply, 2-4 spotlights
5.0635.65.03		5.0635.65.10		5.0635.65.20	
5.0635.65.03		5.0635.65.10		5.0635.65.20	
5.0635.65.03		5.0635.65.10		5.0635.65.20	
5.0635.65.03		5.0635.65.10		5.0635.65.20	
5.0635.65.03		5.0635.65.10		5.0635.65.20	
5.0635.65.03		5.0635.65.10		5.0635.65.20	
5.0635.09.16	RGB-Controller, max 4	5.0635.09.50	RGB-Controller, 5-12 spotlights		

5.0635.65.03	Constant Current power supply, max 3 spotlights	5.0635.65.10	Constant Current power supply, 3-6 spotlights	5.0635.65.20	Constant Current power supply, 5-12 spotlights
5.0635.65.03		5.0635.65.10		5.0635.65.20	
5.0635.65.03		5.0635.65.10		5.0635.65.20	
5.0635.65.03		5.0635.65.10		5.0635.65.20	
5.0635.65.03		5.0635.65.10		5.0635.65.20	
5.0635.65.03		5.0635.65.10		5.0635.65.20	
5.0635.65.03		5.0635.65.10		5.0635.65.20	
5.0635.09.16	RGB-Controller, max 4	5.0635.09.50	RGB-Controller, 5-12 spotlights		

NOTE

POW-LED, series-connected

Glass surface temperature below 40° (Cool Contact)

OPTIONS

Possible beam angle

10° | 30° | 45° | 90° | 15x40°

STAINLESS STEEL V4A 1.4571 316Ti

marine grade 316L stainless steel housing on request

RECESSED SPOTLIGHT
4.0071

EXTERIOR | IP67

- Compact spotlight for variable use
- Up to 495 lumen light intensity
- LED unit can be rotated and swivelled

4.0071 | RECESSED SPOTLIGHT

FOR LIGHTING AND ACCENTUATING EXTERIOR, FAÇADES, BUILDINGS, TREES AND PUBLIC SPACES.

IP67 | STAINLESS STEEL V4A 1.4571 316Ti | POW-LED INCL. | 3.000 K 4.500 K 6.000 K | RGB | CONSTANT CURRENT KONSTANT STROM | DALI 1-10 V OPTIONAL DIMM | CABLE INCL. | 2.5t

· Protection class IP67
· Entirely made of stainless steel 316Ti
· Round or square attachment cover, height 3mm
...
· POW-LED cold white, warm white, neutral white
· POW-LED blue
· POW-LED RGB
· operating mode: constant current
· low voltage halogen QR-CB51 ES 12 V-AC
· 360° pivotable and +/-15° adjustable
· Rotationally symmetric light distribution
...
· Cable screw fixture M16
· including installation housing made of POM plastic for wall and floor installation
· Supplied with lamp and 3m of underwater cable
· Constant-current power source/RGB controller/external transformer

ADDITIONAL PARTS

glass disc, frosted
for softer light distribution (light loss approx. -15%)
4.0071.00.20

anti-glare louver
black, for 3 POW-LED and halogene
4.0071.00.50

PRODUCT LINE

4.0171
Recessed spotlights
(underwater)
> Page 96

4.0072
Surface spotlights
> Page 122

< Project
Navarino Hotel, Pylos Messinia, Greece
Client: FOSS SA

RECESSED SPOTLIGHT 4.0071

EXTERIOR | IP67

Installation sleeve

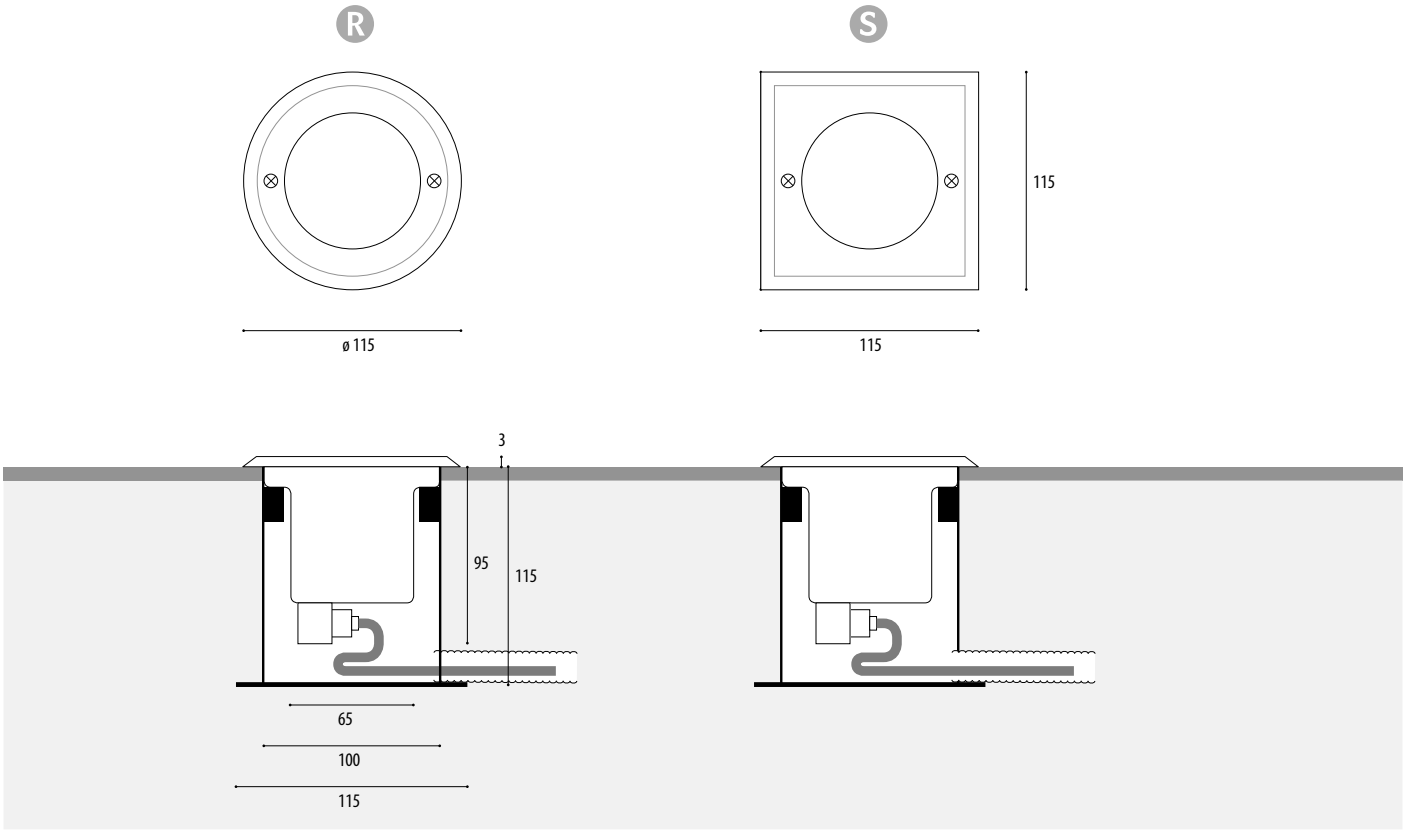

R Article number	S Article number	Lamps	Lumen	Light colour	Wattage	Current	Temperature	Radation angle	Cable, installs	[V]
POW-LED, RADATION ANGLE SPOT										
4.0071.20.01	**4.0071.40.01**	3 POW-LED	495 lm	6000K cold white	total 5 W	CC 350 mA	<40°C	10° spot	UW, 2x1,5 qmm	V32
4.0071.20.02	**4.0071.40.02**	3 POW-LED	405 lm	3000K warm white	total 5 W	CC 350 mA	<40°C	10° spot	UW, 2x1,5 qmm	
4.0071.20.03	**4.0071.40.03**	3 POW-LED	465 lm	4500K neutral white	total 5 W	CC 350 mA	<40°C	10° spot	UW, 2x1,5 qmm	
4.0071.20.06	**4.0071.40.06**	3 POW-LED	400 mW/LED	blue	total 5 W	CC 350 mA	<40°C	10° spot	UW, 2x1,5 qmm	
4.0071.20.09	**4.0071.40.09**	3 POW-LED		RGB	all on 5 W	CC 350 mA	<40°C	10° spot	UW, 6x0,5 qmm	
POW-LED, RADATION ANGLE 30° (MEDIUM)										
4.0071.20.11	**4.0071.40.11**	3 POW-LED	495 lm	6000K cold white	total 5 W	CC 350 mA	<40°C	30° medium	UW, 2x1,5 qmm	V33
4.0071.20.12	**4.0071.40.12**	3 POW-LED	405 lm	3000K warm white	total 5 W	CC 350 mA	<40°C	30° medium	UW, 2x1,5 qmm	
4.0071.20.13	**4.0071.40.13**	3 POW-LED	465 lm	4500K neutral white	total 5 W	CC 350 mA	<40°C	30° medium	UW, 2x1,5 qmm	
4.0071.20.16	**4.0071.40.16**	3 POW-LED	400 mW/LED	blue	total 5 W	CC 350 mA	<40°C	30° medium	UW, 2x1,5 qmm	
4.0071.20.19	**4.0071.40.19**	3 POW-LED		RGB	all on 5 W	CC 350 mA	<40°C	30° medium	UW, 6x0,5 qmm	
HALOGEN										
4.0071.20.20	**4.0071.40.20**	QR-CBC51 (IRC)	300	3000K	20W	12V-AC	80°	36°	UW, 2x1,5 qmm	C63
4.0071.20.35	**4.0071.40.35**	QR-CBC51 (IRC)	620	3000K	35W	12V-AC	90°C	36°	UW, 2x1,5 qmm	C73

RECESSED SPOTLIGHT 4.0071

IP67 | EXTERIOR

< Project
Roundabout, Leingarten, Germany

NOTE

rotatable and +/-15° adjustable

Plastic installation housing included, V4A stainless steel installation housing on request

OPTIONS

Possible beam angle POW-LED

10° | 30° | 45° | 90° | 15x40°

Possible beam angle HALOGENE

10° | 24° | 36° | 60°

POW-LED monochrome, single colour in green, red, amber, turquoise

230 V version

Power supplies Technical details see from page 234.

5.0635.65.03	Constant Current power supply, max 1 spotlights	5.0635.65.10	Constant Current power supply, max 2 spotlights	5.0635.65.20	Constant Current power supply, max 2-4 spotlights
5.0635.65.03		5.0635.65.10		5.0635.65.20	
5.0635.65.03		5.0635.65.10		5.0635.65.20	
5.0635.65.03		5.0635.65.10		5.0635.65.20	
5.0635.09.16	RGB-Controller, max 4	5.0635.09.50	RGB-Controller, max 12 spotlights		

5.0635.65.03	Constant Current power supply, max 1 spotlights	5.0635.65.10	Constant Current power supply, max 2 spotlights	5.0635.65.20	Constant Current power supply, max 2-4 spotlights
5.0635.65.03		5.0635.65.10		5.0635.65.20	
5.0635.65.03		5.0635.65.10		5.0635.65.20	
5.0635.65.03		5.0635.65.10		5.0635.65.20	
5.0635.09.16	RGB-Controller, max 4	5.0635.09.50	RGB-Controller, max 12 spotlights		

HALOGEN

5.0098.00.00	Transformer, max 2 spotlights
5.0098.00.00	Transformer, max 1 spotlights

RECESSED SPOTLIGHT 4.0061KARDAN

EXTERIOR | IP67

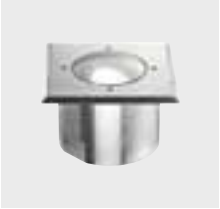

Installation sleeve

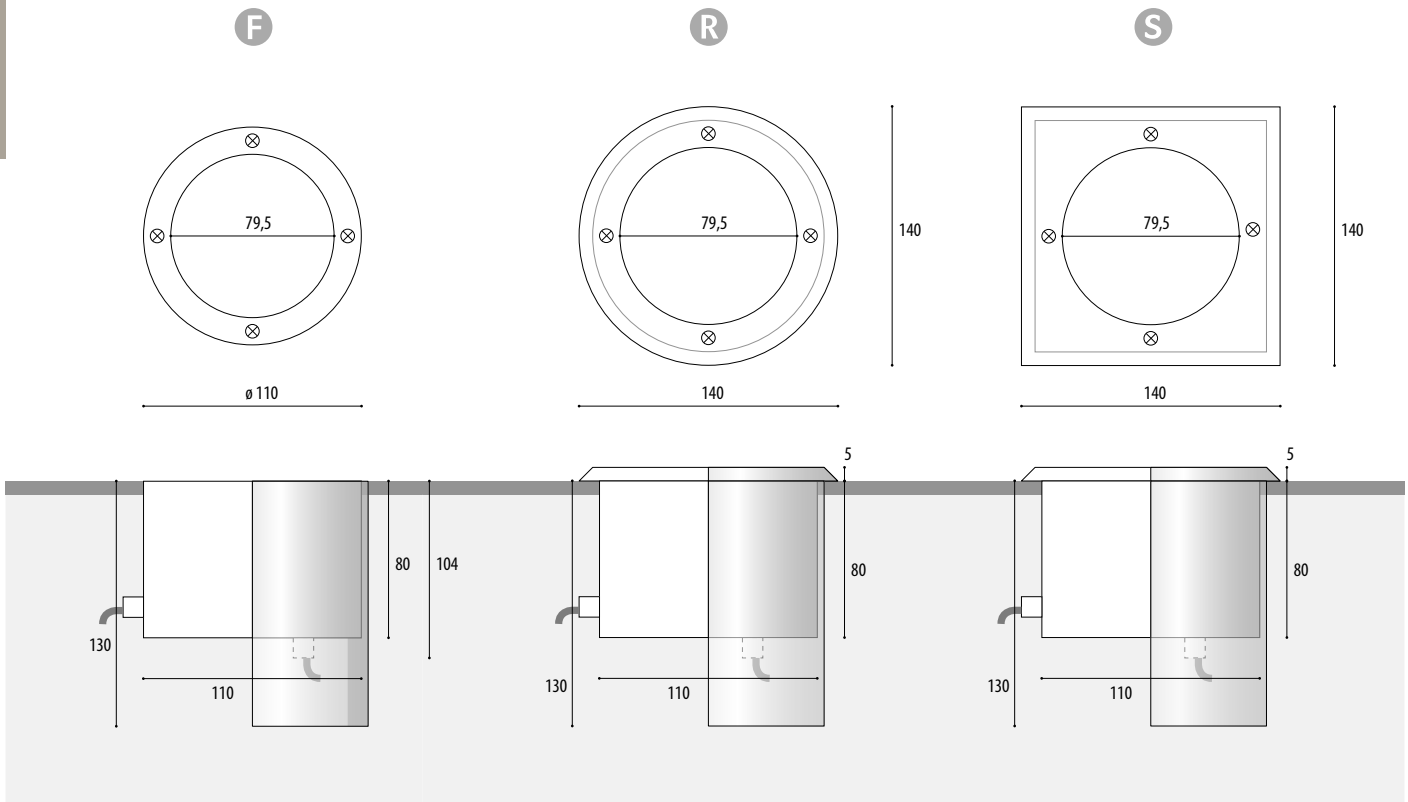

F Article number	R Article number	S Article number	Lamps	Lumen	Light colour	Wattage	Current	Socket	Temperature	Radation angle	Cable, installs	[V]
POW-LED												
4.0061.14.01	**4.0061.24.01**	**4.0061.44.01**	3 POW-LED	495 lm	6000K cold white	total 5 W	CC 350 mA		<40°C	30° medium	UW, 2x1,5 qmm	V33
4.0061.14.02	**4.0061.24.02**	**4.0061.44.02**	3 POW-LED	405 lm	3000K warm white	total 5 W	CC 350 mA		<40°C	30° medium	UW, 2x1,5 qmm	
4.0061.14.03	**4.0061.24.03**	**4.0061.44.03**	3 POW-LED	465 lm	4500K neutral white	total 5 W	CC 350 mA		<40°C	30° medium	UW, 2x1,5 qmm	
4.0061.14.04	**4.0061.24.04**	**4.0061.44.04**	3 POW-LED		yellow	total 5 W	CC 350 mA		<40°C	30° medium	UW, 2x1,5 qmm	
4.0061.14.05	**4.0061.24.05**	**4.0061.44.05**	3 POW-LED		red	total 5 W	CC 350 mA		<40°C	30° medium	UW, 2x1,5 qmm	
4.0061.14.06	**4.0061.24.06**	**4.0061.44.06**	3 POW-LED		blue	total 5 W	CC 350 mA		<40°C	30° medium	UW, 2x1,5 qmm	
4.0061.14.07	**4.0061.24.07**	**4.0061.44.07**	3 POW-LED		green	total 5 W	CC 350 mA		<40°C	30° medium	UW, 2x1,5 qmm	
4.0061.14.09	**4.0061.24.09**	**4.0061.44.09**	3 POW-LED		RGB	all on 5 W	CC 350 mA		<40°C	30° medium	Si, 3x1,5 qmm	
HALOGEN												
4.0061.14.20	**4.0061.24.20**	**4.0061.44.20**	QR-CBC51	210	3000K	20W	12V-AC	GU5,3	80°C	36°	Si, 2x1,5 qmm	C22
4.0061.14.35	**4.0061.24.35**	**4.0061.44.35**	QR-CBC51	430	3000K	35W	12V-AC	GU5,3	90°C	36°	Si, 2x1,5 qmm	C33
4.0061.14.50	**4.0061.24.50**	**4.0061.44.50**	QR-CBC51	680	3000K	50W	12V-AC	GU5,3	105°C	36°	Si, 2x2,5 qmm	C43
4.0061.14.51	**4.0061.24.51**	**4.0061.44.51**	QPAR16			35W	230V	GU10	90°C	35°	Si, 3x1,5 qmm	G11

4.0061 | RECESSED SPOTLIGHT

FOR LIGHTING AND ACCENTUATING EXTERIOR, FAÇADES, BUILDINGS, TREES AND PUBLIC SPACES.

IP67 | ALU | STAINLESS STEEL V4A 1.4571 316Ti | POW-LED INCL. | 3.000 K 4.500 K 6.000 K COLOR | RGB | CONSTANT CURRENT KONSTANT STROM | 1.5t

- Protection system IP67
- made of aluminium
- cover made of stainless steel 316Ti
- Flush-mounted, round and square cover, height 5 mm
- with multi-axial cardan technology
- 360° pivotable et +/-15° adjustable

...

- POW-LED cold white, warm white, neutral white
- POW-LED colered
- POW-LED RGB
- operating mode: constant current
- low voltage halogen QR-CB51 ES 12 V-AC
- High voltage QPAR16
- Light output through multi-cardan pivotable light source unit can be flexibly adjusted

...

- Temperature-resistant silicon seal
- Toughened safety glass (ESG) – withstands loads of up to 1500 kg
- Cable gland PG11, nickel-plated brass
- Supplied with light source and cable (3 m) already connected

ADDITIONAL PARTS

double cable gland
PG11, brass
4.0004.00.11

glass disc, frosted
for softer light distribution (light loss approx. -15%)
4.0060.01.00

Installation housing out of aluminium
for flush cover, height 130 mm
4.0061.04.95

Installation housing out of aluminium
for circular and squared cover, height 130 mm
4.0061.14.95

NOTE

Updated version available: 4.0071 – Page 170

POW-LED, series-connected

In case of use of an housing, cable gland must be mounted on the ground. (Please state!)

OPTIONS

Possible beam angle POW-LED

10° | 30° | 45° | 90°

Possible beam angle HALOGENE

10° | 24° | 36° | 60°

Aluminium installation housing available

CUSTOM MADE — Special brass covers

Coloured QR-CB51 light sources

VERSION — Version without cardan

Power supplies Technical details see from page 234.

5.0635.65.03	Constant Current power supply, max 1 spotlights	**5.0635.65.10**	Constant Current power supply, max 2 spotlights	**5.0635.65.20**	Constant Current power supply, 2-4 spotlights
5.0635.65.03		**5.0635.65.10**		**5.0635.65.20**	
5.0635.65.03		**5.0635.65.10**		**5.0635.65.20**	
5.0635.65.03		**5.0635.65.10**		**5.0635.65.20**	
5.0635.65.03		**5.0635.65.10**		**5.0635.65.20**	
5.0635.65.03		**5.0635.65.10**		**5.0635.65.20**	
5.0635.65.03		**5.0635.65.10**		**5.0635.65.20**	
5.0635.09.16	RGB-Controller, max 4 spotlights				

5.0098.00.00	Transformer, max 2	**5.0100.00.00**	Transformer, max 4 spotlights
5.0098.00.00	Transformer, max 1 spotlights	**5.0100.00.00**	Transformer, max 2 spotlights
5.0098.00.00		**5.0100.00.00**	Transformer, max 2 spotlights
Integrated			

RECESSED SPOTLIGHT 4.0091

EXTERIOR | IP67

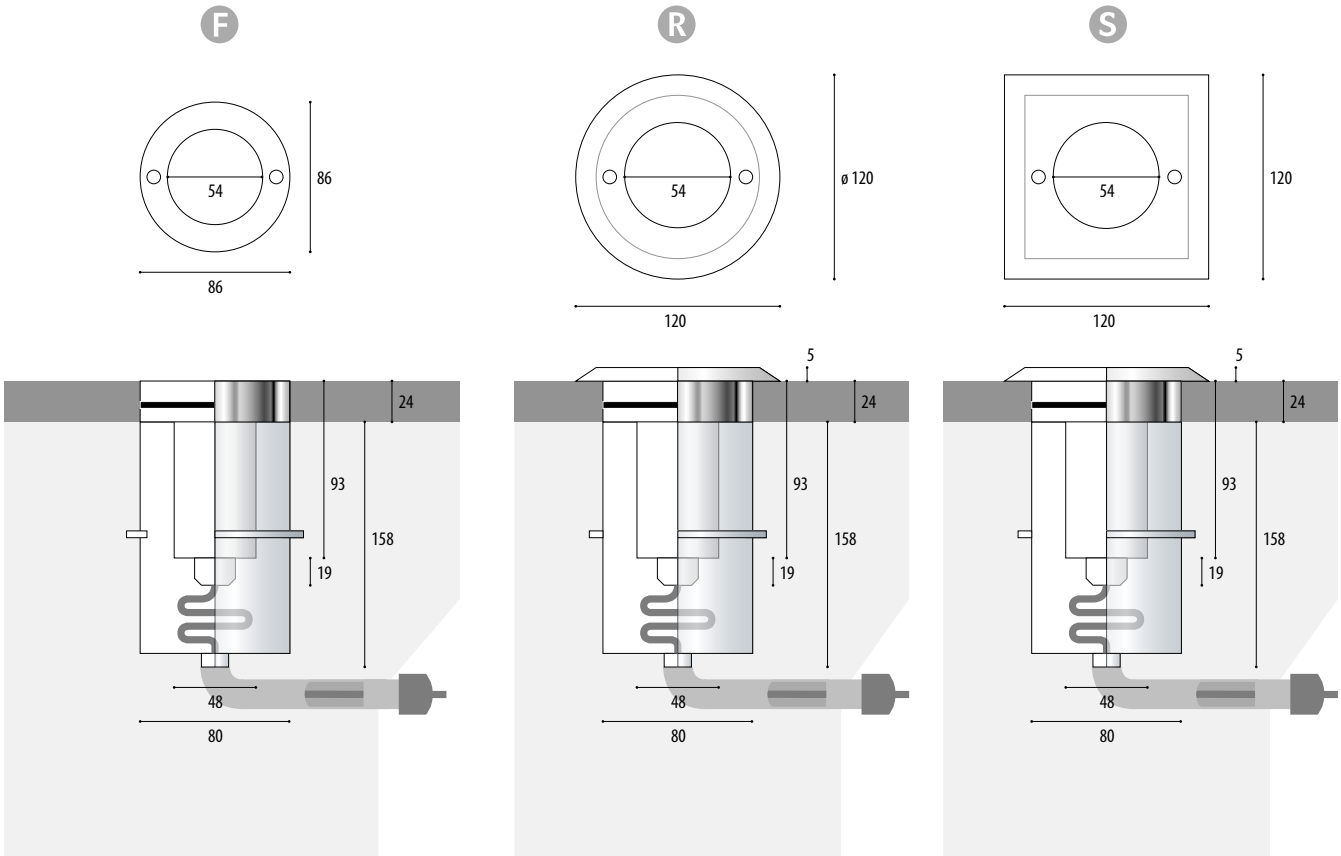

F Article number	R Article number	S Article number	Lamps	Lumen	Light colour	Wattage	Current	Socket	Temperature	Radation angle	Cable, installs	[V]
POW-LED												
4.0091.10.11	**4.0091.20.11**	**4.0091.40.11**	3 POW-LED	495 lm	6000K cold white	total 5 W	CC 350 mA		<40°C	30° medium	UW, 2x1,5 qmm	V33
4.0091.10.12	**4.0091.20.12**	**4.0091.40.12**	3 POW-LED	405 lm	3000K warm white	total 5 W	CC 350 mA		<40°C	30° medium	UW, 2x1,5 qmm	
4.0091.10.13	**4.0091.20.13**	**4.0091.40.13**	3 POW-LED	465 lm	4500K neutral white	total 5 W	CC 350 mA		<40°C	30° medium	UW, 2x1,5 qmm	
4.0091.10.14	**4.0091.20.14**	**4.0091.40.14**	3 POW-LED		yellow	total 5 W	CC 350 mA		<40°C	30° medium	UW, 2x1,5 qmm	
4.0091.10.15	**4.0091.20.15**	**4.0091.40.15**	3 POW-LED		red	total 5 W	CC 350 mA		<40°C	30° medium	UW, 2x1,5 qmm	
4.0091.10.16	**4.0091.20.16**	**4.0091.40.16**	3 POW-LED		blue	total 5 W	CC 350 mA		<40°C	30° medium	UW, 2x1,5 qmm	
4.0091.10.17	**4.0091.20.17**	**4.0091.40.17**	3 POW-LED		green	total 5 W	CC 350 mA		<40°C	30° medium	UW, 2x1,5 qmm	
4.0091.10.19	**4.0091.20.19**	**4.0091.40.19**	3 POW-LED		RGB	all on 5 W	CC 350 mA		<40°C	30° medium	Si, 6x0,5 qmm	
QR-CB51												
4.0091.10.20	**4.0091.20.20**	**4.0091.40.20**	QR-CBC51 (IRC)	300	3000K	20W	12V-AC	GU5,3	80°	36°	Si, 2x1,5 qmm	C63
4.0091.10.35	**4.0091.20.35**	**4.0091.40.35**	QR-CBC51 (IRC)	620	3000K	35W	12V-AC	GU 5,3	90°C	36°	Si, 2x1,5 qmm	C73
QPAR16												
4.0091.10.51	**4.0091.20.51**	**4.0091.40.51**	QPAR16			35W	230V	GU10	90°C	35°	Si, 3x1,5 qmm	G11

4.0091 | RECESSED SPOTLIGHT

FOR LIGHTING AND ACCENTUATING EXTERIOR, FAÇADES, BUILDINGS, TREES AND PUBLIC SPACES.

IP67 | STAINLESS STEEL V4A 1.4571 316Ti | POW-LED INCL. | 3.000 K 4.500 K 6.000 K COLOR | RGB | CONSTANT CURRENT KONSTANT STROM | CABLE INCL. | 1.5t

- Protection system IP67
- Entirely made of stainless steel 316Ti 1.4571
- with installation housing made of stainless steel 316Ti
- Flush-mounted, round and square cover, height 5 mm

...

- POW-LED cold white, warm white, neutral white
- POW-LED clored
- POW-LED RGB
- operating mode: constant current
- low voltage halogen QR-CB51 ES 12 V-AC
- High voltage QPAR16

...

- Temperature-resistant silicon seal
- Toughened safety glass (ESG) – withstands loads of up to 1500 kg
- Cable gland PG11, nickel-plated brass
- Supplied with cable (3 m) already connected, light source and installation housing made of marine grade 316L stainless steel with 1.5m cable protection tube

ADDITIONAL PARTS

glass disc, frosted
for softer light distribution (light loss approx. -15%)
4.0093.01.00

Anti-skid coating

4.0093.02.00

NOTE

Updated version available: 4.0071 – Page 170

POW-LED, series-connected

Power supplies Technical details see from page 234.

5.0635.65.03	Constant Current power supply, max 1 spotlights	5.0635.65.10	Constant Current power supply, max 2 spotlights	5.0635.65.20	Constant Current power supply, 2-4 spotlights
5.0635.65.03		5.0635.65.10		5.0635.65.20	
5.0635.65.03		5.0635.65.10		5.0635.65.20	
5.0635.65.03		5.0635.65.10		5.0635.65.20	
5.0635.65.03		5.0635.65.10		5.0635.65.20	
5.0635.65.03		5.0635.65.10		5.0635.65.20	
5.0635.65.03		5.0635.65.10		5.0635.65.20	
5.0635.09.16	RGB-Controller, max 4 spotlights				

5.0098.00.00	Transformer, max 2 spotlights
5.0098.00.00	Transformer, max 1 spotlights

Integrated

OPTIONS

Possible beam angle POW-LED

10° 30° 45° 90°

Possible beam angle HALOGENE

10° 24° 36° 60°

CUSTOM MADE — Special brass covers

Coloured QR-CB51 light sources

RECESSED SPOTLIGHT
4.0197

EXTERIOR | IP67

- High-quality spotlight for variable applications
- Up to 1980 lumen light intensity
- Surface temperature below 40°C (CoolContact)

4.0197 | RECESSED SPOTLIGHT

FOR ILLUMINATING BUILDINGS, FACADES, OUTDOOR FACILITIES AND TREES.

IP67 | STAINLESS STEEL V4A 1.4571 316Ti | POW-LED INCL. | 3.000 K 4.500 K 6.000 K | RGB | CONSTANT CURRENT CONSTANT VOLTAGE | DALI 1-10 V OPTIONAL DIMM | CABLE INCL. | 1.5t

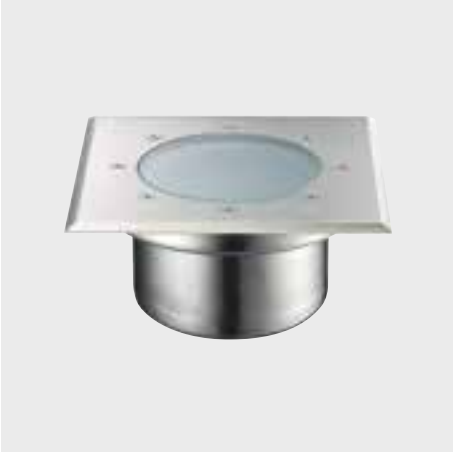

· Protection system IP67
· Entirely made of stainless steel 316Ti 1.4571
· Flush-mounted cover, round and square cover, height 5 mm
...
· operating mode: constant current
  · POW-LED cold white, warm white, neutral white, CC
  · POW-LED RGB
· operating mode: constant voltage
  · POW-LED cold white, warm white, neutral white, CV
· Rotation-symmetric light distribution
...
· Temperature-resistant silicon seal
· Toughened safety glass (ESG) – withstands loads of up to 1500 kg
· Cable gland PG13,5, nickel-plated brass

ADDITIONAL PARTS

Installation housing out of 316L stainless steel

4.0197.10.95

anti-glare louver
black, for HIT-TC-CE
4.0003.01.01

glass disc, frosted
for softer light distribution (light loss approx. -15%)
4.0066.01.00

TIPP

Anti-skid coating

4.0066.02.00

PRODUCT LINE

4.0198
Recessed spotlights (exterior)
> Page 182

4.0192
Surface spotlights
> Page 132

4.0195
Surface spotlights
> Page 136

< Project
Town Hall, Leingarten, Germany

RECESSED SPOTLIGHT 4.0197

EXTERIOR | IP67

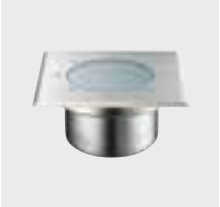

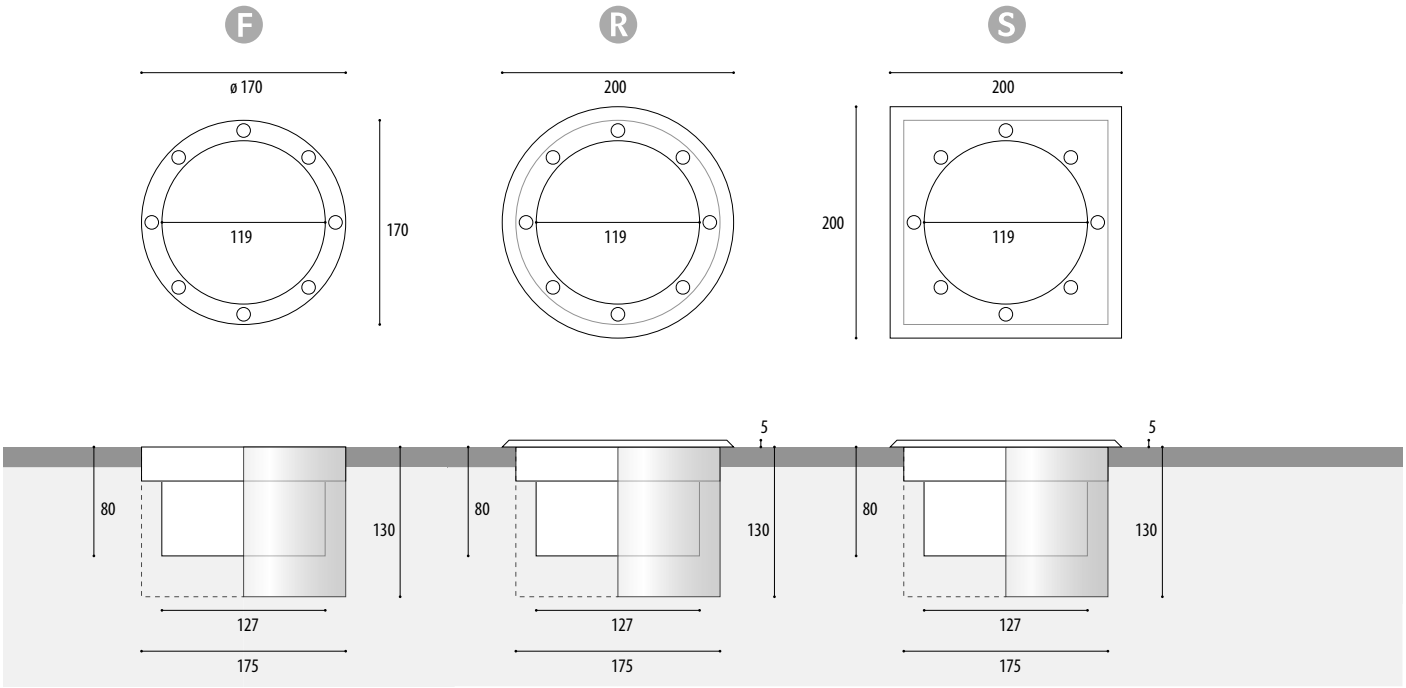

F Article number	R Article number	S Article number	Lamps	Lumen	Light colour	Wattage	Current	Temperature	Radation angle	Cable, installs	[V]
POW-LED 350 MA, CLEAR TEMPERED GLASS LENS											
4.0197.10.01	**4.0197.20.01**	**4.0197.40.01**	12 POW-LED	1980 lm	6000K cold white	total 15 W	CC 350 mA	<40°C	30° medium	UW, 2x1,5 qmm	V23
4.0197.10.02	**4.0197.20.02**	**4.0197.40.02**	12 POW-LED	1620 lm	3000K warm white	total 15 W	CC 350 mA	<40°C	30° medium	UW, 2x1,5 qmm	
4.0197.10.03	**4.0197.20.03**	**4.0197.40.03**	12 POW-LED	1860 lm	4500K neutral white	total 15 W	CC 350 mA	<40°C	30° medium	UW, 2x1,5 qmm	
4.0197.10.09	**4.0197.20.09**	**4.0197.40.09**	12 POW-LED		RGB	all on 19 W	CC 350 mA	<40°C	30° medium	UW, 8x0,5 qmm	
POW-LED 12 V-DC, CLEAR TEMPERED GLASS LENS											
4.0197.10.61	**4.0197.20.61**	**4.0197.40.61**	12 POW-LED	1980 lm	6000K cold white	total 15 W	CV 12 V-DC	<40°	30° medium	UW, 2x1,5 qmm	
4.0197.10.62	**4.0197.20.62**	**4.0197.40.62**	12 POW-LED	1620 lm	3000K warm white	total 15 W	CV 12 V-DC	<40°	30° medium	UW, 2x1,5 qmm	
4.0197.10.63	**4.0197.20.63**	**4.0197.40.63**	12 POW-LED	1860 lm	4500K neutral white	total 15 W	CV 12 V-DC	<40°	30° medium	UW, 2x1,5 qmm	

RECESSED SPOTLIGHT 4.0197

IP67 | EXTERIOR

< Project
Roundabout, Leingarten, Germany

NOTE

In public areas we recommend to use a non-slip glass. See accessories.

POW-LED, series-connected at 350 mA

POW-LED in parallel connection at 12 V-DC

In case of use of an housing, cable gland must be mounted on the ground. (Please state!)

OPTIONS

Possible beam angle POW-LED

10° | 30° | 45° | 90° | 15x40°

The installation housing can be supplied as an option (4.0197.10.95)

IP68 — Protection system IP68 (fully ready for operation with light source and cables)

Matt glass lens for softer light distribution (light loss approx. -15%)

DALI 1-10 V OPTIONAL DIMM — 12 V-DC dimmable with dimming module 5.0690.03.15. Note: Other cable to the spotlight is required. Requires further agreements.

Power supplies — Technical details see from page 234.

5.0635.65.20	Constant Current power supply, max 1 spotlights	5.0635.00.36	Constant Current power supply, max 3 spotlights
5.0635.65.20		5.0635.00.36	
5.0635.65.20		5.0635.00.36	
5.0635.09.16	RGB-Controller, max 1 spotlights	5.0635.09.50	RGB-Controller, max 3 spotlights

5.0600.65.60	Constant Voltage power supply, max 3 spotlights	5.0600.65.15	Constant Voltage power supply, max 9 spotlights
5.0600.65.60		5.0600.65.15	
5.0600.65.60		5.0600.65.15	

RECESSED SPOTLIGHT 4.0198

EXTERIOR | IP67

- High-quality spotlight for variable applications
- Up to 1980 lumen light intensity
- Versions with integrated operating device (230 V)

4.0198 | RECESSED SPOTLIGHT

FOR ILLUMINATION FOR BUILDINGS, FACADES, OUTDOOR FACILITIES AND TREES.

IP67 | STAINLESS STEEL V4A 1.4571 316Ti | POW-LED INCL. | 3.000 K 4.500 K 6.000 K RGB | 230 V | CONSTANT CURRENT KONSTANT STROM | CABLE INCL. | 1.5t

· Protection system IP67
· Entirely made of stainless steel 316Ti 1.4571
· Flush-mounted cover or round and square cover, height 5 mm
...
· POW-LED cold white, warm white, neutral white, 230 V
· POW-LED RGB CC
· HIT-TC-CE
· Rotation-symmetric light distribution
· 360° pivotable et +/-15° adjustable
...
· Temperature-resistant silicon seal
· Toughened safety glass (ESG) – withstands loads of up to 1500 kg
· Cable gland PG13,5, nickel-plated brass
· Supplied with light source and 3 m of underwater cable

ADDITIONAL PARTS

glass disc, frosted
for softer light distribution (light loss approx. -15%)
4.0066.01.00

Installation housing out of 316L stainless steel
4.0198.10.95

TIPP
Anti-skid coating
4.0066.02.00

anti-glare louver
black, for HIT-TC-CE
4.0003.01.01

double cable gland
PG13,5, brass
4.0004.00.13

PRODUCT LINE

4.0197
Recessed spotlights (exterior)
> Page 178

4.0192
Surface spotlights
> Page 132

4.0195
Surface spotlights
> Page 136

< Project
Winery Graf Neipperg, Neipperg, Germany

RECESSED SPOTLIGHT 4.0198

EXTERIOR | IP67

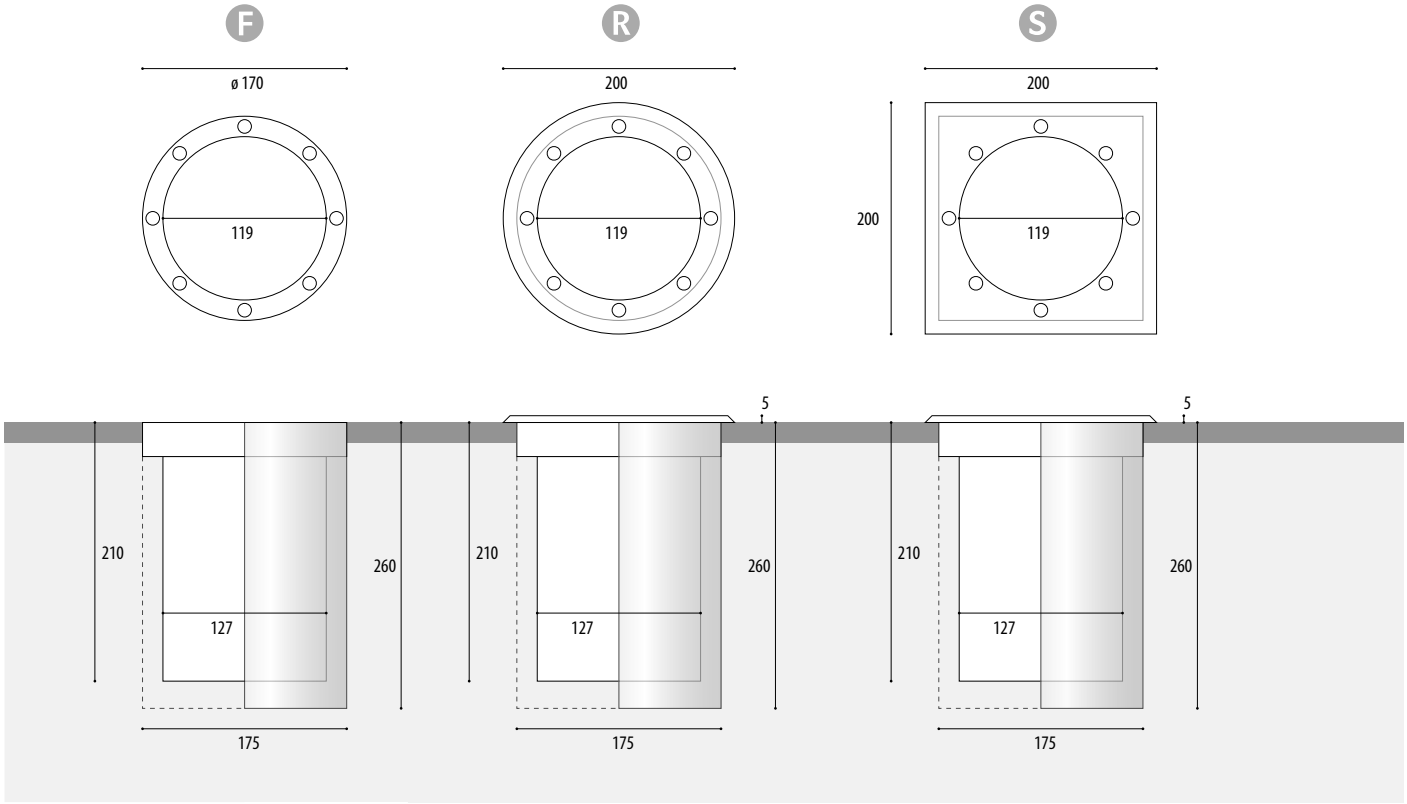

F Article number	R Lamps	S Lamps	Lamps	Lumen	Light colour	Wattage	Current/Voltage	Socket	Temperature	Radation angle	Cable, installs	[V]
POW-LED												
4.0198.10.01	**4.0198.20.01**	**4.0198.40.01**	12 POW-LED	1980 lm	6000K cold white	total 15 W	230V	Klemme	<40°C	30° medium	UW, 3x1,5 qmm	V23
4.0198.10.02	**4.0198.20.02**	**4.0198.40.02**	12 POW-LED	1620 lm	3000K warm white	total 15 W	230V	Klemme	<40°C	30° medium	UW, 3x1,5 qmm	
4.0198.10.03	**4.0198.20.03**	**4.0198.40.03**	12 POW-LED	1860 lm	4500K neutral white	total 15 W	230V	Klemme	<40°C	30° medium	UW, 3x1,5 qmm	
4.0198.10.09	**4.0198.20.09**	**4.0198.40.09**	12 POW-LED		RGB	all on 19 W	CC 350 mA	Klemme	<40°C	30° medium	UW, 8x0,5 qmm	
HIT-TC-CE												
4.0198.12.20	**4.0198.22.20**	**4.0198.42.20**	HIT-TC-CE	1.500lm		20W	230V	G8,5	<55°C	7° superspot	UW, 3x1,5 qmm	M18
4.0198.12.35	**4.0198.22.35**	**4.0198.42.35**	HIT-TC-CE	3.300lm		35W	230V	G8,5	<75°C	7° superspot	UW, 3x1,5 qmm	M19
4.0198.13.20	**4.0198.23.20**	**4.0198.43.20**	HIT-TC-CE	1.800lm		20W	230V	G8,5	<55°C	15° spot	UW, 3x1,5 qmm	M30
4.0198.13.35	**4.0198.23.35**	**4.0198.43.35**	HIT-TC-CE	3.100lm		35W	230V	G8,5	<75°C	15° spot	UW, 3x1,5 qmm	M31
4.0198.16.20	**4.0198.26.20**	**4.0198.46.20**	HIT-TC-CE	1.500lm		20W	230V	G8,5	<55°C	35° medium	UW, 3x1,5 qmm	M20
4.0198.16.35	**4.0198.26.35**	**4.0198.46.35**	HIT-TC-CE	3.300lm		35W	230V	G8,5	<75°C	35° medium	UW, 3x1,5 qmm	M21
4.0198.17.20	**4.0198.27.20**	**4.0198.47.20**	HIT-TC-CE	1.500lm		20W	230V	G8,5	<55°C	55° flood	UW, 3x1,5 qmm	M32
4.0198.17.35	**4.0198.27.35**	**4.0198.47.35**	HIT-TC-CE	3.300lm		35W	230V	G8,5	<75°C	55° flood	UW, 3x1,5 qmm	M33

IP67 EXTERIOR

< Project
Tabarly Museum, Lorient, France

NOTE

In public areas we recommend to use a non-slip glass. See accessories.

POW-LED, series-connected

POW-LED white with integrated power supply

In case of use of an housing, cable gland must be mounted on the ground. (Please state!)

OPTIONS

Possible beam angle POW-LED

10° 30° 45° 90° 15x40°

The installation housing can be supplied as an option (4.0198.10.95)

IP68 Protection system IP68 (fully ready for operation with light source and cables)

Matt glass lens for softer light distribution (light loss approx. -15%)

	Power supplies	Technical details see from page 234.		
	Integrated			
	Integrated			
	Integrated			
	5.0635.09.16	RGB-Controller, max 1 spotlights	5.0635.09.50	RGB-Controller, max 3 spotlights
	Integrated			
	Integrated			
	Integrated			
	Integrated			
	Integrated			
	Integrated			
	Integrated			
	Integrated			

RECESSED SPOTLIGHT 4.0098

EXTERIOR | IP67

- Spotlight for very variable use
- Load-bearing capacity of up to 5 tons
- Can be used individually by means of various panels

4.0098 | RECESSED SPOTLIGHT

FOR ILLUMINATING BUILDING FACADES, GREEN AREAS, PARKS AND OUTDOOR FACILITIES.

IP67 | STAINLESS STEEL V4A 1.4571 316Ti | 230 V | EXCL. | CABLE EXCL. | 5t | 650kg | CE

· Protection system IP67
· Entirely made of stainless steel 316Ti 1.4571
· with flush-mounted cover, round or square cover or lock ring
...
· QT32, TC-TEL, HIT-CRI, HSE-E, HIE, HIT-DE-CE, HIT-DE
· Reflector made of high-purity aluminium, symmetrical/asymmetrical
· Adjustable reflector: spot, flood and medium
...
· Temperature-resistant silicon seal
· Toughened safety glass (ESG) – withstands loads of up to 5000 kg, lock ring up to 650 kg
· Cable gland PG 16/21, nickel-plated brass
· With fitted ballast device (depending on the light source)
· Supplied without light source and without cable

ADDITIONAL PARTS

Installation housing 316Ti stainless steel
ø 235 x 300 mm
for flush, round and square cover
4.0098.10.95

anti-glare louver
black, for adjustable Reflector
4.0003.02.00

Installation housing 316Ti stainless steel
ø 235 x 300 mm
for lock ring
4.0098.00.95

anti-glare louver
black, for symm. and asymm. Reflector
4.0003.01.00

rippled glass
with antiskid coating
for flush, round and square cover
4.0231.02.00

double cable gland
PG16/21, brass
4.0004.00.16

rippled glass, frosted
for softer light distribution (light loss approx. -15%)
50.4.00019.194

TIPP
glass disc, frosted
for softer light distribution (light loss approx. -15%)
for lock ring
4.0230.01.00

PRODUCT LINE

4.0095
Surface spotlights
> Page 144

4.0304
Recessed spotlights (exterior)
> Page 190

< Project
Pöchlarn, Austria
Client: LKD Licht, Austria; Photo: stefanzauner.at

RECESSED SPOTLIGHT 4.0098

EXTERIOR | IP67

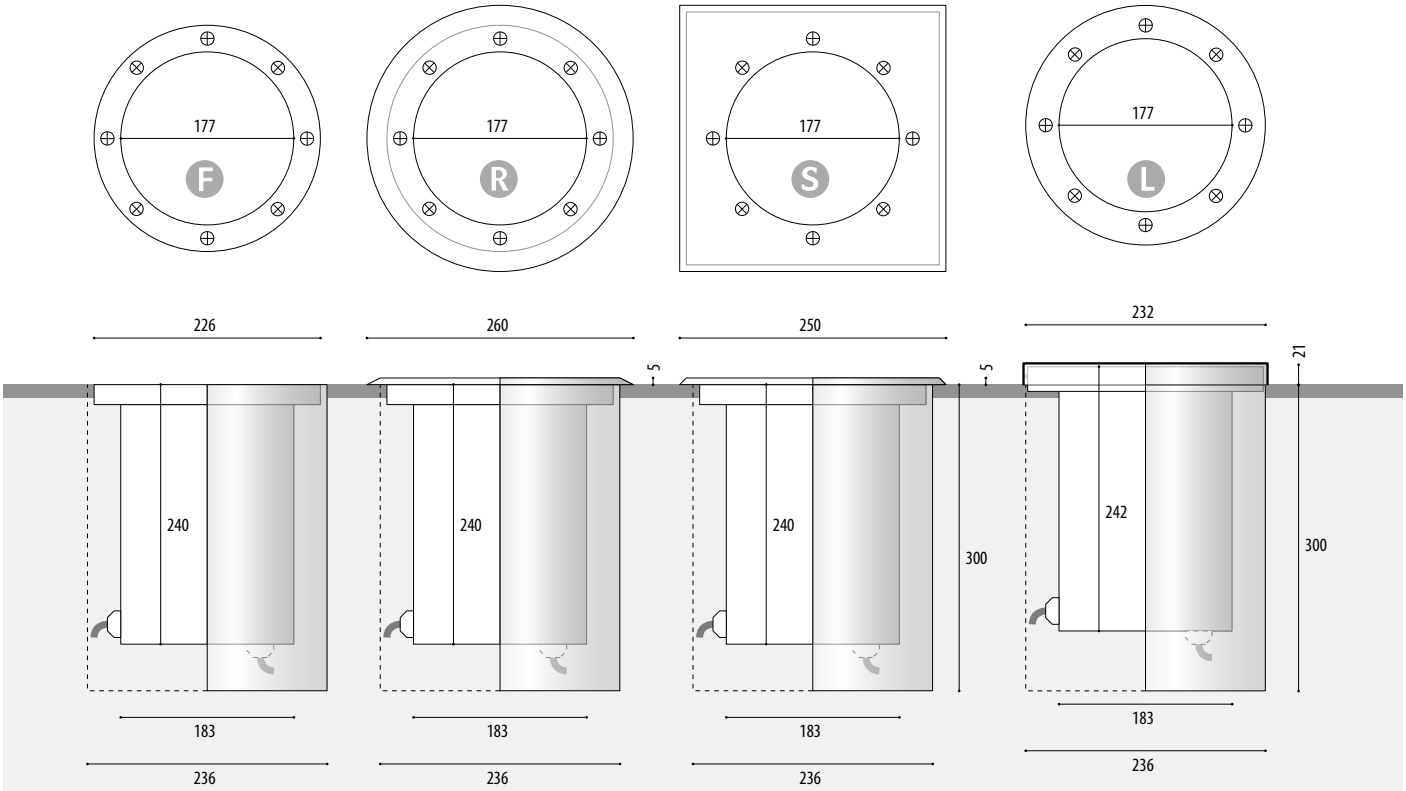

F	R	S	L								
Article number	Article number	Article number	Article number	Lamps	Wattage	Voltage	Socket	Temperature	Radation angle	Cable	[V]
SYMMETRIC REFLECTOR, CLEAR TEMPERED GLASS LENS											
4.0098.10.00	4.0098.20.00	4.0098.40.00	4.0098.00.00	QT32	max 250W	230V	E27	150°C	24°	Si, 3x2,5 qmm	F35
4.0098.10.42	4.0098.20.42	4.0098.40.42	4.0098.00.42	TC-TEL	42W	230V	GX24q-3	<75°C	45°	Si, 3x2,5 qmm	T11
4.0098.10.70	4.0098.20.70	4.0098.40.70	4.0098.00.70	HIT-CRI	70W	230V	G12	110°C	19°	Si, 3x2,5 qmm	I33
4.0098.10.71	4.0098.20.71	4.0098.40.71	4.0098.00.71	HSE-E	70W	230V	E27	110°C	35°	Si, 3x2,5 qmm	R32
4.0098.10.72	4.0098.20.72	4.0098.40.72	4.0098.00.72	HIE	70W	230V	E27	110°C	42°	Si, 3x2,5 qmm	L31
ASYMMETRIC REFLECTOR, FROSTED GLASS											
4.0098.11.00	4.0098.21.00	4.0098.41.00	4.0098.01.00	QT32	250W	230V	E27	150°C	30°	Si, 3x2,5 qmm	F45
4.0098.11.70	4.0098.21.70	4.0098.41.70	4.0098.01.70	HIT-CRI	70W	230V	G12	110°C	40°	Si, 3x2,5 qmm	I43
4.0098.11.71	4.0098.21.71	4.0098.41.71	4.0098.01.71	HSE-E	70W	230V	E27	110°C	74°	Si, 3x2,5 qmm	R82
ADJUSTABLE REFLECTOR (+/-15°), CLEAR GLASS LENS, FLOOD											
4.0098.12.00	4.0098.22.00	4.0098.42.00	4.0098.02.00	QT-DE12	150W	230V	R7s	100°C	80°	Si, 3x2,5 qmm	E51
4.0098.12.35	4.0098.22.35	4.0098.42.35	4.0098.02.35	HIT-DE-CE	35W	230V	RX7s	<75°C	80°	Si, 3x2,5 qmm	I91
4.0098.12.70	4.0098.22.70	4.0098.42.70	4.0098.02.70	HIT-DE	70W	230V	RX7s	110°C	80°	Si, 3x2,5 qmm	J51
4.0098.12.71	4.0098.22.71	4.0098.42.71	4.0098.02.71	HST-DE	70W	230V	RX7s	110°C	80°	Si, 3x2,5 qmm	Q51
ADJUSTABLE REFLECTOR (+/-15°), CLEAR GLASS LENS, MEDIUM											
4.0098.16.12	4.0098.26.12	4.0098.46.12	4.0098.06.12	HST-CRI	100W	230V	GX12-1	120°C	35°	Si, 3x2,5 qmm	P82
4.0098.16.35	4.0098.26.35	4.0098.46.35	4.0098.06.35	HIT-CRI	35W	230V	G12	<75°C	35°	Si, 3x2,5 qmm	I81
4.0098.16.52	4.0098.26.52	4.0098.46.52	4.0098.06.52	HST-CRI	50W	230V	GX12-1	80°C	35°	Si, 3x2,5 qmm	P81
4.0098.16.70	4.0098.26.70	4.0098.46.70	4.0098.06.70	HIT-CRI	70W	230V	G12	110°C	35°	Si, 3x2,5 qmm	I83
ADJUSTABLE REFLECTOR (+/-15°), CLEAR GLASS LENS, SPOT											
4.0098.13.12	4.0098.23.12	4.0098.43.12	4.0098.03.12	HST-CRI	100W	230V	GX12-1	120°C	11°	Si, 3x2,5 qmm	P62
4.0098.13.35	4.0098.23.35	4.0098.43.35	4.0098.03.35	HIT-CRI	35W	230V	G12	<75°C	11°	Si, 3x2,5 qmm	I61
4.0098.13.52	4.0098.23.52	4.0098.43.52	4.0098.03.52	HST-CRI	50W	230V	GX12-1	80°C	11°	Si, 3x2,5 qmm	P61
4.0098.13.70	4.0098.23.70	4.0098.43.70	4.0098.03.70	HIT-CRI	70W	230V	G12	110°C	12°	Si, 3x2,5 qmm	I63

IP67 EXTERIOR

< Project
Pöchlarn, Austria
Client: LKD Licht, Austria; Photo: stefanzauner.at

Power supplies	Technical details see from page 234.
	Integrated
	Integrated
	Integrated
	Integrated
	Integrated
	Integrated
	Integrated
	Integrated
	Integrated
	Integrated
	Integrated
	Integrated
	Integrated
	Integrated
	Integrated
	Integrated
	Integrated
	Integrated
	Integrated
	Integrated

NOTE

In public areas we recommend to use a non-slip glass. See accessories.

In case of use of an housing, cable gland must be mounted on the ground. (Please state!)

POW-LED

Version with POW-LED: 4.0304

OPTIONS

Coloured HIT light sources available

IP68

Protection system IP68 (fully ready for operation with light source and cables)

Special brass covers

Cable gland on floor possible

The installation housing can be supplied as an option

Please order the double cable gland for ring assembly separately

RECESSED SPOTLIGHT 4.0304

EXTERIOR | IP67

- Spotlight for very variable use
- Up to 5940 lumen light intensity
- Load-bearing capacity of up to 5 tons

4.0304 | RECESSED SPOTLIGHT

FOR ILLUMINATING BUILDING FACADES, GREEN AREAS, PARKS AND OUTDOOR FACILITIES.

IP67 | STAINLESS STEEL V4A 1.4571 316Ti | POW-LED INCL. | 3.000 K 4.500 K 6.000 K | RGB | CONSTANT CURRENT / CONSTANT VOLTAGE | EXCL. | CABLE EXCL. | 5t | 650kg | CE

· Protection system IP67
· Entirely made of stainless steel 316Ti 1.4571
· with flush-mounted cover, round or square cover or lock ring
...
· operating mode: constant current
  · POW-LED cold white, warm white, neutral white, CC
  · POW-LED RGB
· operating mode: constant voltage
  · POW-LED cold white, warm white, neutral white, CV
· POW-LED-Platine temperatur control (NTC)
· QT32, HIT-CRI
· Reflector made of high-purity aluminium, symmetrical/asymmetrical
...
· Temperature-resistant silicon seal
· Toughened safety glass (ESG) – withstands loads of up to 5000 kg, lock ring up to 650 kg
· Cable gland PG 16/21, nickel-plated brass
· fitted ballast device at HIT-CRI
· ballast device not included at POW-LED (order separately)
· 230 V mains voltage at QT32
· Supplied without light source and without cable
· POW-LED with light source and cable

ADDITIONAL PARTS

Installation housing 316Ti stainless steel
ø 235 x 230 mm
for flush, round and square cover
4.0304.10.95

anti-glare louver
black, for symm. and asymm. Reflector
4.0003.01.00

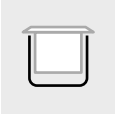

Installation housing 316Ti stainless steel
ø 235 x 230 mm
for lock ring
4.0304.00.95

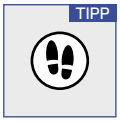

rippled glass
with antiskid coating
for flush, round and square cover
4.0231.02.00

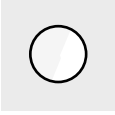

rippled glass, frosted
for softer light distribution
(light loss approx. -15%)
50.4.00019.194

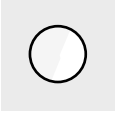

glass disc, frosted
for softer light distribution
(light loss approx. -15%)
for lock ring
4.0230.01.00

PRODUCT LINE

4.0365
Surface spotlights
> Page 140

4.0098
Recessed spotlights (exterior)
> Page 186

< Project
Iglootel, Arvidsjaur, Sweden, www.iglootel.com
Photo: www.mirahampel.de; Planner: www.lichtteam.de

RECESSED SPOTLIGHT 4.0304

EXTERIOR | IP67

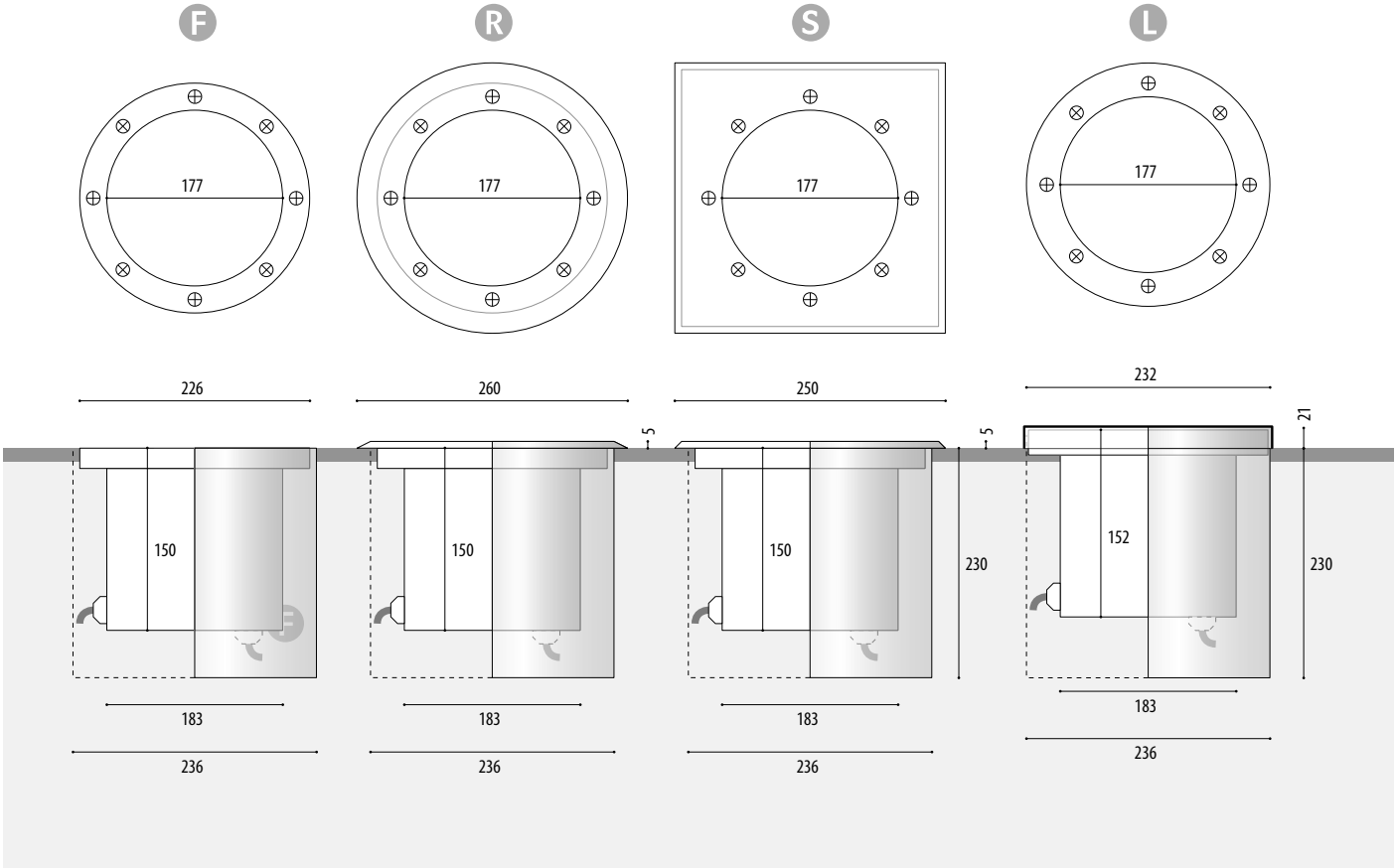

F Article number	R Article number	S Article number	L Article number	Lamps	Lumen	Wattage	Current/Voltage	Socket	Temperature	Radation angle	Cable	[V]
SYMMETRIC REFLECTOR, CLEAR TEMPERED GLASS LENS												
4.0304.10.00	4.0308.20.00	4.0308.40.00	4.0303.00.00	QT32		150W	230V	E27	150°C	24°	Si, 3x2,5 qmm	F33
4.0304.10.35	4.0308.20.35	4.0308.40.35	4.0303.00.35	HIT-CRI		35W	230V	G12	<75°C	19°	Si, 3x2,5 qmm	I31
4.0304.10.70	4.0308.20.70	4.0308.40.70	4.0303.00.70	HIT-CRI		70W	230V	G12	110°C	19°	Si, 3x2,5 qmm	I33
Asymmetric reflector, frosted glass												
4.0304.11.00	4.0308.21.00	4.0308.41.00	4.0303.01.00	QT32		150W	230V	E27	150°C	30°	Si, 3x2,5 qmm	F43
4.0304.11.35	4.0308.21.35	4.0308.41.35	4.0303.01.35	HIT-CRI		35W	230V	G12	<75°C	40°	Si, 3x2,5 qmm	I41
4.0304.11.70	4.0308.21.70	4.0308.41.70	4.0303.01.70	HIT-CRI		70W	230V	G12	110°C	40°	Si, 3x2,5 qmm	I43
POW-LED 350 MA, CLEAR TEMPERED GLASS LENS – 350 MA												
4.0304.15.01	4.0308.25.01	4.0308.45.01	4.0303.05.01	36 POW-LED 6.000K	5940 lm	total 43 W	CC 350 mA	Klemme	<55°C	30° medium	Si, 8x0,5 qmm	V73
4.0304.15.02	4.0308.25.02	4.0308.45.02	4.0303.05.02	36 POW-LED 3.000K	4860 lm	total 43 W	CC 350 mA	Klemme	<55°C	30° medium	Si, 8x0,5 qmm	
4.0304.15.03	4.0308.25.03	4.0308.45.03	4.0303.05.03	36 POW-LED 4.500K	5580 lm	total 43 W	CC 350 mA	Klemme	<55°C	30° medium	Si, 8x0,5 qmm	
4.0304.15.09	4.0308.25.09	4.0308.45.09	4.0303.05.09	36 POW-LED RGB		all on 43 W	CC 350 mA	Klemme	<55°C	30° medium	Si, 8x0,5 qmm	
POW-LED 350 MA, CLEAR TEMPERED GLASS LENS – 12 V-DC												
4.0304.15.61	4.0308.25.61	4.0308.45.61	4.0303.05.61	36 POW-LED 6.000K	5940 lm	total 43 W	CV 12 V-DC	Klemme	<55°	30° medium	UW, 2x2,5 qmm	
4.0304.15.62	4.0308.25.62	4.0308.45.62	4.0303.05.62	36 POW-LED 3.000K	4860 lm	total 43 W	CV 12 V-DC	Klemme	<55°	30° medium	UW, 2x2,5 qmm	
4.0304.15.63	4.0308.25.63	4.0308.45.63	4.0303.05.63	36 POW-LED 4.500K	5580 lm	total 43 W	CV 12 V-DC	Klemme	<55°	30° medium	UW, 2x2,5 qmm	

IP67 EXTERIOR

< Project
Iglootel, Arvidsjaur, Sweden, www.iglootel.com
Planner: www.lichtteam.de

NOTE

In public areas we recommend to use a non-slip glass. See accessories.

In case of use of an housing, cable gland must be mounted on the ground. (Please state!)

OPTIONS

Possible beam angle POW-LED

10° 30° 45° 90° 15x40°

IP68 Protection system IP68 (fully ready for operation with light source and cables)

Special brass covers

Cable gland on floor possible

The installation housing can be supplied as an option

Please order the double cable gland for ring assembly separately

DALI 1-10 V OPTIONAL DIMM — 12 V-DC dimmable with dimming module 5.0690.03.15. Note: Other cable to the spotlight is required. Requires further agreements.

Power supplies	Technical details see from page 234.		
	Integrated		
	Integrated		
	Integrated		
	Integrated		
	Integrated		
	Integrated		
	5.0635.00.36		
	5.0635.00.36	Constant Current power supply, max 1 spotlights	
	5.0635.00.36		
	5.0635.09.50	RGB-Controller, max 1 spotlights	
	5.0600.65.60		5.0600.65.15
	5.0600.65.60	Constant Voltage power supply, max 1 spotlights	5.0600.65.15 Constant Voltage power supply, max 3 spotlights
	5.0600.65.60		5.0600.65.15

RECESSED SPOTLIGHT 4.4000

EXTERIOR | IP67

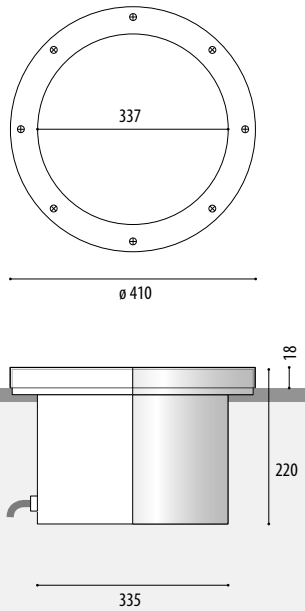

Article number	Lamps	Wattage	Voltage	Socket	Temperature	Radation angle	Cable	[V]
SYMMETRIC REFLECTOR, CLEAR TEMPERED GLASS LENS								
4.4000.00.15	HIE	150W	230V	E27	110°C		Si, 3x2,5 qmm	L75
4.4000.00.71	HSE-E	50/70W	230V	E27	80°		Si, 3x2,5 qmm	R72
ASYMMETRIC REFLECTOR, CLEAR TEMPERED GLASS LENS								
4.4000.01.15	HIE	150W	230V	E27	110°C		Si, 3x2,5 qmm	L85
4.4000.01.71	HSE-E	50/70W	230V	E27	80°		Si, 3x2,5 qmm	R82

4.4000 | RECESSED SPOTLIGHT

FOR WIDE ILLUMINATION BUILDINGS AND OUTDOOR FACILITIES.

IP67 | STAINLESS STEEL V4A 1.4571 316Ti | 230 V | EXCL. | CABLE EXCL. | 650kg

· Protection system IP67
· Entirely made of stainless steel 316Ti 1.4571
...
· HIE, HSE
· Marine grade 316Ti stainless steel reflector
...
· Temperature-resistant silicon seal
· Toughened safety glass (ESG) – withstands loads of up to 650 kg
· Cable gland PG 16/24, nickel-plated brass
· With integral ballast device
· Supplied without light source and without cable

ADDITIONAL PARTS

anti-glare louver

4.0008.01.00

glass disc, frosted
for softer light distribution (light loss approx. -15%)
4.0230.41.00

OPTIONS

IP68 — Protection system IP68 (fully ready for operation with light source and cables)

CUSTOM MADE — Round attachment cover available

CUSTOM MADE — special designs available

Coloured HIT light sources available

Please order the double cable gland for ring assembly separately

Power supplies	Technical details see from page 234.
	Integrated
	Integrated
	Integrated
	Integrated

RECESSED SPOTLIGHT 4.4100

EXTERIOR | IP67

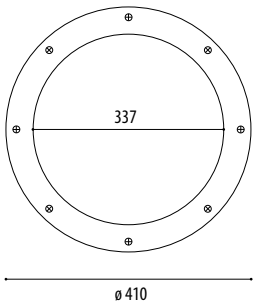

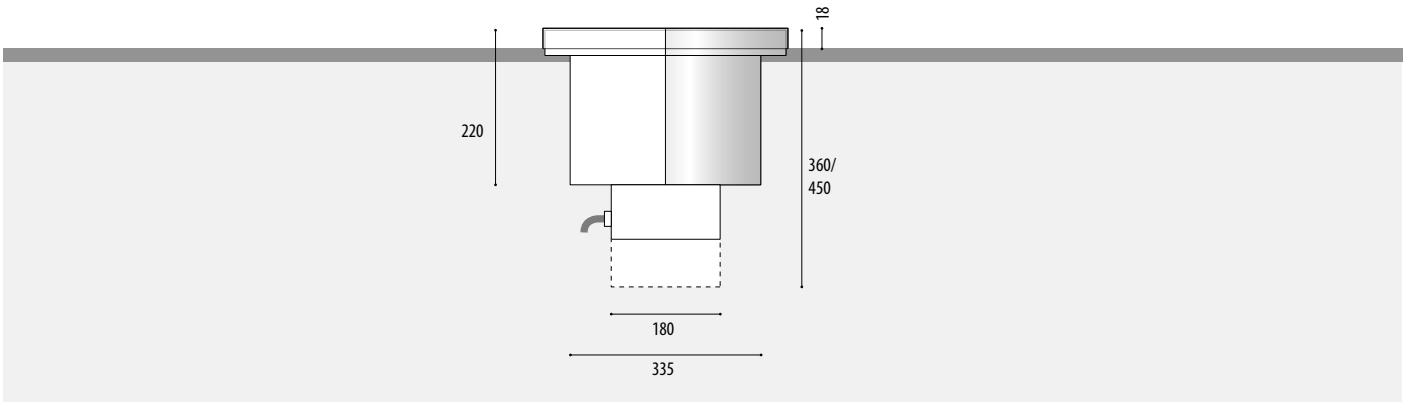

Article number	Lamps	Wattage	Voltage	Socket	Temperature	Radation angle	Cable	[V]
SYMMETRIC REFLECTOR, CLEAR TEMPERED GLASS LENS								
4.4100.00.25	HIE	250W	230V	E40	160°C	80°	Si, 3x2,5 qmm	L76
4.4100.00.26	HSE-MF	250W	230V	E40	150°C	80°	Si, 3x2,5 qmm	R75
4.4100.00.28	HSE-MF	150W	230V	E40	145°C		Si, 3x2,5 qmm	R74
4.4100.00.40	HSE-MF	400W	230V	E40	180°C	80°	Si, 3x2,5 qmm	R76
4.4100.00.41	HIE	400W	230V	E40	170°C	80°	Si, 3x2,5 qmm	L77
ASYMMETRIC REFLECTOR, CLEAR TEMPERED GLASS LENS								
4.4100.01.25	HIE	250W	230V	E40	160°C	80°	Si, 3x2,5 qmm	L86
4.4100.01.26	HSE-MF	250W	230V	E40	150°C	80°	Si, 3x2,5 qmm	R85
4.4100.01.28	HSE-MF	150W	230V	E40	145°C		Si, 3x2,5 qmm	R84
4.4100.01.40	HSE-MF	400W	230V	E40	180°C	80°	Si, 3x2,5 qmm	R86
4.4100.01.41	HIE	400W	230V	E40	170°C	80°	Si, 3x2,5 qmm	L87

4.4100 | RECESSED SPOTLIGHT

FOR WIDE ILLUMINATION BUILDINGS AND OUTDOOR FACILITIES.

IP67 | STAINLESS STEEL V4A 1.4571 316Ti | 230 V | EXCL. | CABLE EXCL. | 650kg

· Protection system IP67
· Entirely made of stainless steel 316Ti 1.4571
...
· HIE, HSE
· Marine grade 316Ti stainless steel reflector
...
· Temperature-resistant silicon seal
· Toughened safety glass (ESG) – withstands loads of up to 650 kg
· Cable gland PG 16/24, nickel-plated brass
· With integral ballast device
· Supplied without light source and without cable

ADDITIONAL PARTS

anti-glare louver

4.0008.01.00

glass disc, frosted
for softer light distribution (light loss approx. -15%)
4.0230.41.00

Power supplies	Technical details see from page 234.
	Integrated
	Integrated
	Integrated
	Integrated
	Integrated
	Integrated
	Integrated
	Integrated
	Integrated
	Integrated

OPTIONS

IP68 — Protection system IP68 (fully ready for operation with light source and cables)

CUSTOM MADE — Round attachment cover available

CUSTOM MADE — special designs available

Coloured HIT light sources available

Please order the double cable gland for ring assembly separately

RECESSED SPOTLIGHT 4.1010

EXTERIOR | IP67

- Robust glass surface
- Fully encapsulated
- Up to 1100 lumen light intensity

4.1010 | LINEAR RECESSED-LIGHT

FOR LINEAR EFFECT AND ORIENTATION LIGHTING IN PUBLIC AREAS AND SIDEWALKS.

IP67 | STAINLESS STEEL V4A 1.4571 316Ti | POW-LED INCL. | 3.000 K 4.500 K 6.000 K | CONSTANT VOLTAGE KONSTANT SPANNUNG | CABLE INCL. | 1.0t

· Protection system IP67
· flush mounted linear lighting fixture
· Entirely made of stainless steel 316Ti 1.4571
· fully encapsulated
...
· Low-Power-LED cold white, warm white, neutral white, CV
· operating mode: constant voltage
...
· installation without any gap of numerous fixtures possible, line of light without any gaps
· anti skid toughened safety glass (ESG)
· connection with special cable connectors (plug and socket)
· 250mm and 1000mm versions available
· extrenal driver (to be ordered separately according to project needs!)
· recessing box for ground and wall mounting available in T shape
· delivery with 2 x 0,5 m cable for junction to next lighting fixture
...
Version OL: Orientation lighting fixture
· completely homogenous light distribution
· suitable for accentuation and orientation lighting
...
Version LL: linear lighting fixture
· smooth light distribution with visible LED dots
· suitable for lighting of walls and facades

ADDITIONAL PARTS

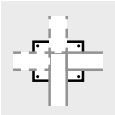

Junction element for cross-, T- and L-junctions, stainless steel

9.1010.00.01

Junction element for linear junctions, stainless steel

9.1010.01.01

Dismantling tool

9.1010.00.40

Special underwater cable
pro m, 2 x 1 qmm, ø 6,1 mm
9.6150.02.10

Connection plug

9.1010.00.30

Connection socket

9.1010.01.30

< Project
Pöchlarn, Austria
Client: LKD Licht, Austria; Photo: stefanzauner.at

RECESSED SPOTLIGHT 4.1010

EXTERIOR

IP67

250 mm

1000 mm

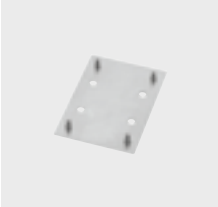
Junction element

Junction element

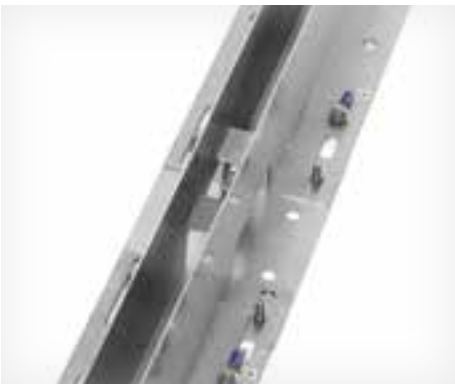
linear junction

cross-, T- and L- junction

Dismantling tool

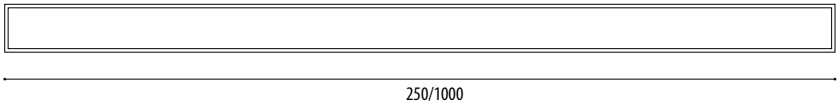

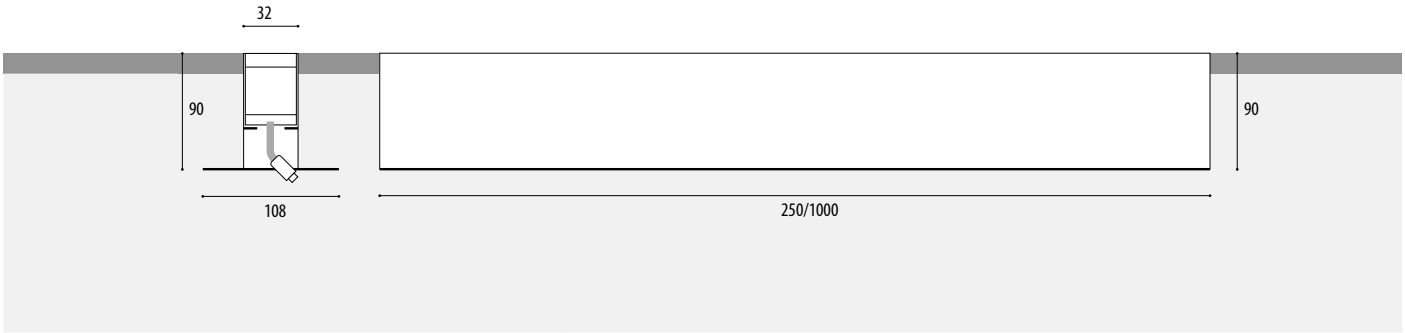

Article number	Lamps	Lumen	Light colour	Wattage	Voltage	Temperature	Radation angle	Cable, installs
VERSION OL: ORIENTATION LIGHT - LENGTH 250 MM								
4.1025.10.01	SMD-LED cold white	270 lm	6000K	total 3 W	24 V-DC	<40°C	diffus	UW, 2x1,0 qmm
4.1025.10.02	SMD-LED warm white	250 lm	3000K	total 3 W	24 V-DC	<40°C	diffus	UW, 2x1,0 qmm
4.1025.10.03	SMD-LED neutral white	270 lm	4500K	total 3 W	24 V-DC	<40°C	diffus	UW, 2x1,0 qmm
VERSION LL: LINEAR LIGHTING FIXTURE - LENGTH 250 MM								
4.1025.10.11	SMD-LED cold white	270 lm	6000K	total 3 W	24 V-DC	<40°C	diffus	UW, 2x1,0 qmm
4.1025.10.12	SMD-LED warm white	250 lm	3000K	total 3 W	24 V-DC	<40°C	diffus	UW, 2x1,0 qmm
4.1025.10.13	SMD-LED neutral white	270 lm	4500K	total 3 W	24 V-DC	<40°C	diffus	UW, 2x1,0 qmm
VERSION OL: ORIENTATION LIGHT - LENGTH 1000 MM								
4.1010.10.01	SMD-LED cold white	1100 lm	6000K	total 10 W	24 V-DC	<40°C	diffus	UW, 2x1,0 qmm
4.1010.10.02	SMD-LED warm white	1000 lm	3000K	total 10 W	24 V-DC	<40°C	diffus	UW, 2x1,0 qmm
4.1010.10.03	SMD-LED neutral white	1100 lm	4500K	total 10 W	24 V-DC	<40°C	diffus	UW, 2x1,0 qmm
VERSION LL: LINEAR LIGHTING FIXTURE - LENGTH 1000 MM								
4.1010.10.11	SMD-LED cold white	1100 lm	6000K	total 10 W	24 V-DC	<40°C	diffus	UW, 2x1,0 qmm
4.1010.10.12	SMD-LED warm white	1000 lm	3000K	total 10 W	24 V-DC	<40°C	diffus	UW, 2x1,0 qmm
4.1010.10.13	SMD-LED neutral white	1100 lm	4500K	total 10 W	24 V-DC	<40°C	diffus	UW, 2x1,0 qmm

INSTALLATION HOUSING	
4.1025.00.00	Installation housing out of 316L stainless steel, T-Version, for 4.1025, length 250 mm
4.1010.00.00	Installation housing out of 316L stainless steel, T-Version, for 4.1010, length 1000 mm

IP67 EXTERIOR

< Project
Town Hall, Mondorf, Luxembourg

< Project
Iglootel, Arvidsjaur, Sweden, www.iglootel.com
Planner: www.lichtteam.de

Power supplies	Technical details on request		
5.1010.65.20 5.1010.65.20 5.1010.65.20	Constant Voltage power supply, max 6 spotlights	5.1010.65.60 5.1010.65.60 5.1010.65.60	Constant Voltage power supply, max 18 spotlights
5.1010.65.20 5.1010.65.20 5.1010.65.20	Constant Voltage power supply, max 6 spotlights	5.1010.65.60 5.1010.65.60 5.1010.65.60	Constant Voltage power supply, max 18 spotlights
5.1010.65.20 5.1010.65.20 5.1010.65.20	Constant Voltage power supply, max 2 spotlights	5.1010.65.60 5.1010.65.60 5.1010.65.60	Constant Voltage power supply, max 5 spotlights
5.1010.65.20 5.1010.65.20 5.1010.65.20	Constant Voltage power supply, max 2 spotlights	5.1010.65.60 5.1010.65.60 5.1010.65.60	Constant Voltage power supply, max 5 spotlights

NOTE

An installation housing is required for a new installation. Please order separately.

Project/installation details required.

Request power supplies project-related (DALI, DMX)

Junction element order separately

OPTIONS

Monochrome SMD-LED available in red, green, blue, yellow

RGB

SMD-LED RGB available

CUSTOM MADE

other lengths available on request

RECESSED SPOTLIGHT 4.3030

EXTERIOR | IP67

- Effective linear illumination
- Up to 680 lumen light intensity
- LED unit can be swivelled

4.3030 | RECESSED LINEAR SPOTLIGHT

FOR LINEAR ILLUMINATION OF BUILDINGS, FACADES AND PUBLIC AREAS.

IP67 | STAINLESS STEEL V4A 1.4571 316Ti | POW-LED INCL. | 3.000 K 4.500 K 6.000 K | RGB | 350 mA 230 V | CABLE INCL. | 2.5t | IK10

· Protection system IP67
· Entirely made of stainless steel 316Ti 1.4571
· Flush-mounted or rectangular cover, height 5 mm
...
· POW-LED cold white, warm white, neutral white, 230 V
· SMD-LED cold white, warm white, neutral white, 230 V

· POW-LED RGB 350 mA
· operating mode: constant current

· TC-SEL
· Linear light distribution, symmetrical/asymmetrical TC-SEL
· +/- 15° adjustable POW-LED
· SMD-LED with diffus glass as an orientation lamp
· POW-LED-Platine temperatur control (NTC)
...
· Cable gland PG11, marine grade 316Ti stainless steel
· Installation housing available as an option
· Supplied with light source and 3 m of underwater cable

ADDITIONAL PARTS

TIPP

Anti-skid coating

4.3030.02.00

glass disc, frosted
for softer light distribution (light loss approx. -15%)
4.3030.03.00

anti-glare louver

4.0003.30.30

PRODUCT LINE

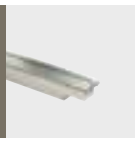

4.3060
Recessed spotlights (exterior)
> Page 206

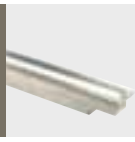

4.3090
Recessed spotlights (exterior)
> Page 210

4.3012
Recessed spotlights (exterior)
> Page 214

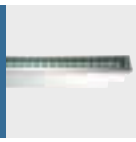

4.3061
Recessed spotlights (underwater)
> Page 110

< Project
Mairie, Puget sur Argens, France

RECESSED SPOTLIGHT 4.3030

EXTERIOR | IP67

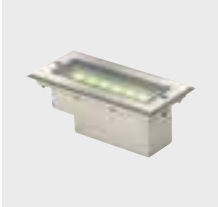

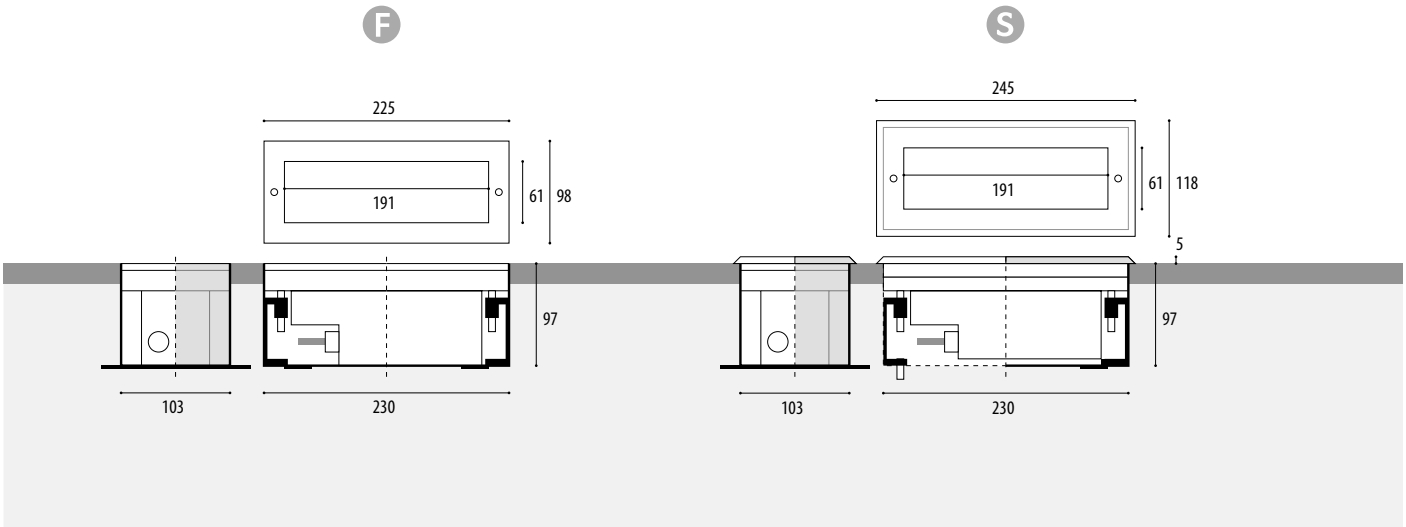

F	S									
Article number	Article number	Lamps	Lumen	Light colour	Wattage	Current/Voltage	Radation angle	Temperature	Cable, installs	[V]
TC-SEL										
4.3030.10.07	**4.3030.40.07**	TC-SEL	400lm	2700K	7W/9W	230V	symmetrisch	<55°C	UW, 3x1,5 qmm	T30
4.3030.11.07	**4.3030.41.07**	TC-SEL	400lm	2700K	7W/9W	230V	asymmetrisch	<55°C	UW, 3x1,5 qmm	T30
POW-LED, RADATION ANGLE 30° (MEDIUM)										
4.3030.10.11	**4.3030.40.11**	6 POW-LED	680 lm	6000K cold white	total 7 W	230V	30° medium	<55°C	UW, 3x1,5 qmm	V60
4.3030.10.12	**4.3030.40.12**	6 POW-LED	600 lm	3000K warm white	total 7 W	230V	30° medium	<55°C	UW, 3x1,5 qmm	
4.3030.10.13	**4.3030.40.13**	6 POW-LED	660 lm	4500K neutral white	total 7 W	230V	30° medium	<55°C	UW, 3x1,5 qmm	
4.3030.10.19	**4.3030.40.19**	6 POW-LED			all on 8 W	CC 350 mA	30° medium	<55°C	UW, 8x0,5 qmm	
SMD-LED										
4.3030.10.01	**4.3030.40.01**	SMD-LED cold white		6500K	3 W	230V	diffus	<40°C	UW, 3x1,5 qmm	
4.3030.10.02	**4.3030.40.02**	SMD-LED warm white		3000K	3 W	230V	diffus	<40°C	UW, 3x1,5 qmm	
4.3030.10.03	**4.3030.40.03**	SMD-LED neutral white		4000K	3 W	230V	diffus	<40°C	UW, 3x1,5 qmm	
INSTALLATION HOUSING										
4.3030.00.00	**4.3030.00.00**	Installation housing out of 316L stainless steel with 2 terminating elements								

RECESSED SPOTLIGHT 4.3030

IP67 | EXTERIOR

< Project
Sarrebourg, France

Power supplies	Technical details see from page 234.
Integrated	
Integrated	
Integrated	
Integrated	
Integrated	
5.0635.09.50	RGB-Controller, max 6 spotlights
Integrated	
Integrated	
Integrated	

NOTE

Glass surface temperature below 75° (Cool Contact)

CUSTOM MADE — Special designs and customer-specific equipment available on request

In public areas we recommend to use a non-slip glass. See accessories.

OPTIONS

Possible beam angle POW-LED

10° | 30° | 45° | 90° | 15x40°

RGB — SMD-LED RGB available

RECESSED SPOTLIGHT 4.3060

EXTERIOR | IP67

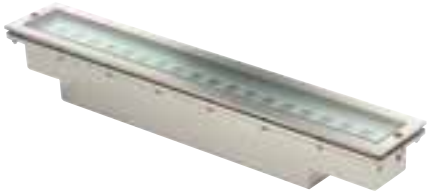

- Effective linear illumination
- Up to 2520 lumen light intensity
- LED unit can be swivelled

4.3060 | RECESSED LINEAR SPOTLIGHT

FOR LINEAR ILLUMINATION OF BUILDINGS, FACADES AND PUBLIC AREAS.

IP67 | STAINLESS STEEL V4A 1.4571 316Ti | POW-LED INCL. | 3.000 K 4.500 K 6.000 K | RGB | 350 mA 230 V | CABLE INCL. | 2.5t | IK10

· Protection system IP67
· Entirely made of stainless steel 316Ti 1.4571
· Flush-mounted or rectangular cover, height 5 mm
...
· POW-LED cold white, warm white, neutral white, 230 V
· SMD-LED cold white, warm white, neutral white, 230 V

· POW-LED RGB 350 mA
· operating mode: constant current

· T16
· Linear light distribution
· symmetrical/asymmetrical T16
· +/- 15° adjustable POW-LED
· SMD-LED with diffus glass as an orientation lamp
· POW-LED-Platine temperatur control (NTC)
...
· Installation housing available as an option, with option for linear connection to an expansion housing (only in conjunction with a flush-mounted cover)
· Supplied with light source, 3 m of underwater cable and connection box

ADDITIONAL PARTS

TIPP

Anti-skid coating

4.3060.02.00

glass disc, frosted
for softer light distribution (light loss approx. -15%)
4.3060.03.00

anti-glare louver

4.0003.30.60

PRODUCT LINE

4.3030
Recessed spotlights (exterior)
> Page 202

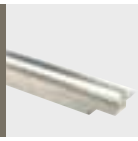

4.3090
Recessed spotlights (exterior)
> Page 210

4.3012
Recessed spotlights (exterior)
> Page 214

4.3061
Recessed spotlights (underwater)
> Page 110

RECESSED SPOTLIGHT 4.3060

EXTERIOR | IP67

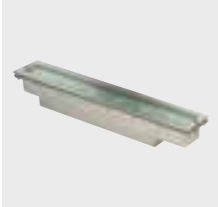

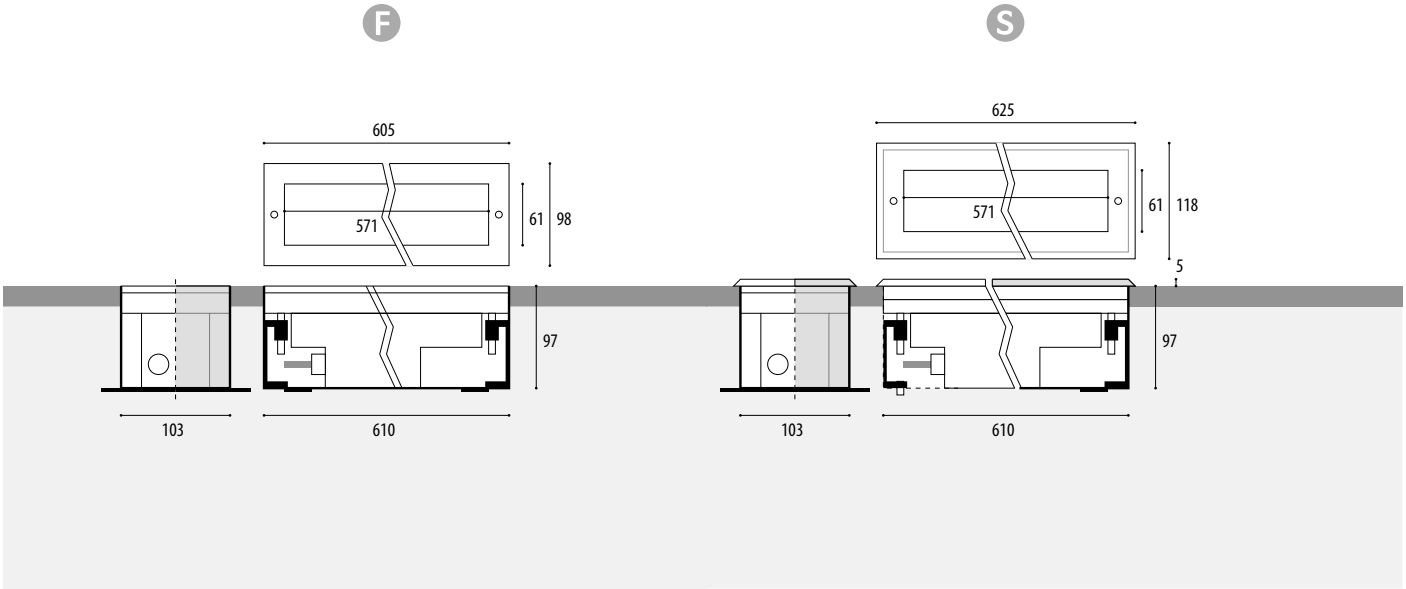

F Article number	S Article number	Lamps	Lumen	Light colour	Wattage	Current/Voltage	Radation angle	Temperature	Cable, installs	[V]
T16										
4.3060.10.07	**4.3060.40.07**	T5	1.750lm	2700K	24W	230V	symmetrisch	<55°C	UW, 3x1,5 qmm	T31
4.3060.11.07	**4.3060.41.07**	T5	1.750lm	2700K	24W	230V	asymmetrisch	<55°C	UW, 3x1,5 qmm	T31
POW-LED, RADATION ANGLE 30° (MEDIUM)										
4.3060.10.11	**4.3060.40.11**	18 POW-LED	2520 lm	6000K cold white	total 24 W	230V	30° medium	<55°C	UW, 3x1,5 qmm	V61
4.3060.10.12	**4.3060.40.12**	18 POW-LED	1800 lm	3000K warm white	total 24 W	230V	30° medium	<55°C	UW, 3x1,5 qmm	
4.3060.10.13	**4.3060.40.13**	18 POW-LED	1980 lm	4500K neutral white	total 24 W	230V	30° medium	<55°C	UW, 3x1,5 qmm	
4.3060.10.19	**4.3060.40.19**	18 POW-LED		RGB	all on 23 W	CC 350 mA	30° medium	<55°C	UW, 8x0,5 qmm	
SMD-LED										
4.3060.10.01	**4.3060.40.01**	SMD-LED cold white		6500K	5 W	230V	diffus	<40°C	UW, 3x1,5 qmm	
4.3060.10.02	**4.3060.40.02**	SMD-LED warm white		3000K	5 W	230V	diffus	<40°C	UW, 3x1,5 qmm	
4.3060.10.03	**4.3060.40.03**	SMD-LED neutral white		4000K	5 W	230V	diffus	<40°C	UW, 3x1,5 qmm	
INSTALLATION HOUSING										
4.3060.00.00	**4.3060.00.00**	Installation housing out of 316L stainless steel with 2 terminating elements								
4.3060.01.00		Extension housing out of 316L stainless steel with 2 junction elements								

RECESSED SPOTLIGHT 4.3060

IP67 | EXTERIOR

Power supplies	Technical details see from page 234.
Integrated	
Integrated	
Integrated	
Integrated	
Integrated	
5.0635.09.50	RGB-Controller, max 2 spotlights
Integrated	
Integrated	
Integrated	

NOTE

Glass surface temperature below 75° (Cool Contact)

CUSTOM MADE — Special designs and customer-specific equipment available on request

In public areas we recommend to use a non-slip glass. See accessories.

OPTIONS

Possible beam angle POW-LED

10° | 30° | 45° | 90° | 15x40°

RGB — SMD-LED RGB available

180° — Variant as surface-mounted spotlight available (tiltable from 180 °)

RECESSED SPOTLIGHT 4.3090

EXTERIOR | IP67

- Effective linear illumination
- Up to 3780 lumen light intensity
- LED unit can be swivelled

4.3090 | RECESSED LINEAR SPOTLIGHT

FOR LINEAR ILLUMINATION OF BUILDINGS, FACADES AND PUBLIC AREAS.

IP67 | STAINLESS STEEL V4A 1.4571 316Ti | POW-LED INCL. | 3.000 K 4.500 K 6.000 K | RGB | 350 mA 230 V | CABLE INCL. | 2.5t | IK10

· Protection system IP67
· Entirely made of stainless steel 316Ti 1.4571
· Flush-mounted or rectangular cover, height 5 mm
...
· POW-LED cold white, warm white, neutral white, 230 V
· SMD-LED cold white, warm white, neutral white, 230 V

· POW-LED RGB 350 mA
· operating mode: constant current

· T16
· Linear light distribution
· symmetrical/asymmetrical T16
· +/- 15° adjustable POW-LED
· SMD-LED with diffus glass as an orientation lamp
· POW-LED-Platine temperatur control (NTC)
...
· Installation housing available as an option, with option for linear connection to an expansion housing (only in conjunction with a flush-mounted cover)
· Supplied with light source, 3 m of underwater cable and connection box

ADDITIONAL PARTS

TIPP

Anti-skid coating

4.3090.02.00

glass disc, frosted
for softer light distribution (light loss approx. -15%)
4.3090.03.00

anti-glare louver

4.0003.30.90

PRODUCT LINE

4.3030
Recessed spotlights (exterior)
> Page 202

4.3060
Recessed spotlights (exterior)
> Page 206

4.3012
Recessed spotlights (exterior)
> Page 214

4.3061
Recessed spotlights (underwater)
> Page 110

< Project
QBIG, Heilbronn, Germany
Photo: Hermann Mohr, Fotoclub Obersulm

RECESSED SPOTLIGHT 4.3090

EXTERIOR | IP67

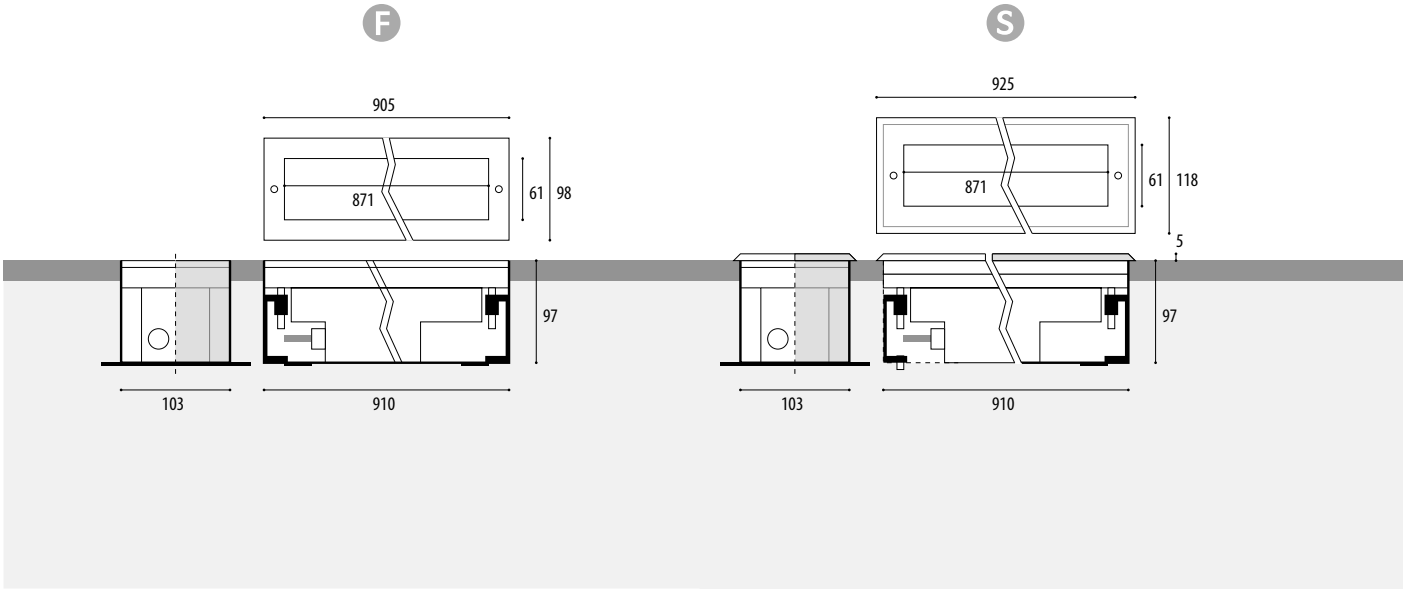

F Article number	S Article number	Lamps	Lumen	Light colour	Wattage	Current/Voltage	Radation angle	Temperature	Cable, installs	[V]
T16										
4.3090.10.39	**4.3090.40.39**	T5	3.100lm	2700K	39W	230V	symmetrisch	<75°C	UW, 3x1,5 qmm	T32
4.3090.11.39	**4.3090.41.39**	T5	3.100lm	2700K	39W	230V	asymmetrisch	<75°C	UW, 3x1,5 qmm	T32
POW-LED, RADATION ANGLE 30° (MEDIUM)										
4.3090.10.11	**4.3090.40.11**	27 POW-LED	3780 lm	6000K cold white	total 36 W	230V	30° medium	<55°C	UW, 3x1,5 qmm	V62
4.3090.10.12	**4.3090.40.12**	27 POW-LED	2700 lm	3000K warm white	total 36 W	230V	30° medium	<55°C	UW, 3x1,5 qmm	
4.3090.10.13	**4.3090.40.13**	27 POW-LED	2970 lm	4500K neutral white	total 36 W	230V	30° medium	<55°C	UW, 3x1,5 qmm	
4.3090.10.19	**4.3090.40.19**	27 POW-LED			all on 34 W	CC 350 mA	30° medium	<55°C	UW, 8x0,5 qmm	
SMD-LED										
4.3090.10.01	**4.3090.40.01**	SMD-LED cold white		6500K	7 W	230V	diffus	<40°C	UW, 3x1,5 qmm	
4.3090.10.02	**4.3090.40.02**	SMD-LED warm white		3000K	7 W	230V	diffus	<40°C	UW, 3x1,5 qmm	
4.3090.10.03	**4.3090.40.03**	SMD-LED neutral white		4000K	7 W	230V	diffus	<40°C	UW, 3x1,5 qmm	
INSTALLATION HOUSING										
4.3090.00.00	**4.3090.00.00**	Installation housing out of 316L stainless steel with 2 terminating elements								
4.3090.01.00		Extension housing out of 316L stainless steel with 2 junction elements								

IP67 EXTERIOR

Power supplies	Technical details see from page 234.
	Integrated
	Integrated
	Integrated
	Integrated
	Integrated
5.0635.09.50	RGB-Controller, max 1 spotlights
	Integrated
	Integrated
	Integrated

NOTE

Glass surface temperature below 75° (Cool Contact)

CUSTOM MADE

Special designs and customer-specific equipment available on request

In public areas we recommend to use a non-slip glass. See accessories.

OPTIONS

Possible beam angle POW-LED

10° 30° 45° 90° 15x40°

RGB

SMD-LED RGB available

180°

Variant as surface-mounted spotlight available (tiltable from 180 °)

RECESSED SPOTLIGHT 4.3012

EXTERIOR | IP67

- Effective linear illumination
- Up to 5040 lumen light intensity
- LED unit can be swivelled

4.3012 | RECESSED LINEAR SPOTLIGHT

FOR LINEAR ILLUMINATION OF BUILDINGS, FACADES AND PUBLIC AREAS.

IP67 | STAINLESS STEEL V4A 1.4571 316Ti | POW-LED INCL. | 3.000 K 4.500 K 6.000 K | RGB | 350 mA 230 V | CABLE INCL. | 2.5t | IK10

· Protection system IP67
· Entirely made of stainless steel 316Ti 1.4571
· Flush-mounted or rectangular cover, height 5 mm
...
· POW-LED cold white, warm white, neutral white, 230 V
· SMD-LED cold white, warm white, neutral white, 230 V

· POW-LED RGB 350 mA
· operating mode: constant current

· T16
· Linear light distribution
· symmetrical/asymmetrical T16
· +/- 15° adjustable POW-LED
· SMD-LED with diffus glass as an orientation lamp
· POW-LED-Platine temperatur control (NTC)
...
· Installation housing available as an option, with option for linear connection to an expansion housing (only in conjunction with a flush-mounted cover)
· Supplied with light source, 3 m of underwater cable and connection box

ADDITIONAL PARTS

TIPP

Anti-skid coating

4.3012.02.00

glass disc, frosted
for softer light distribution (light loss approx. -15%)
50.43012.0001

anti-glare louver

4.0003.30.12

PRODUCT LINE

4.3030
Recessed spotlights (exterior)
> Page 202

4.3060
Recessed spotlights (exterior)
> Page 206

4.3090
Recessed spotlights (exterior)
> Page 210

4.3061
Recessed spotlights (underwater)
> Page 110

RECESSED SPOTLIGHT 4.3012

EXTERIOR | IP67

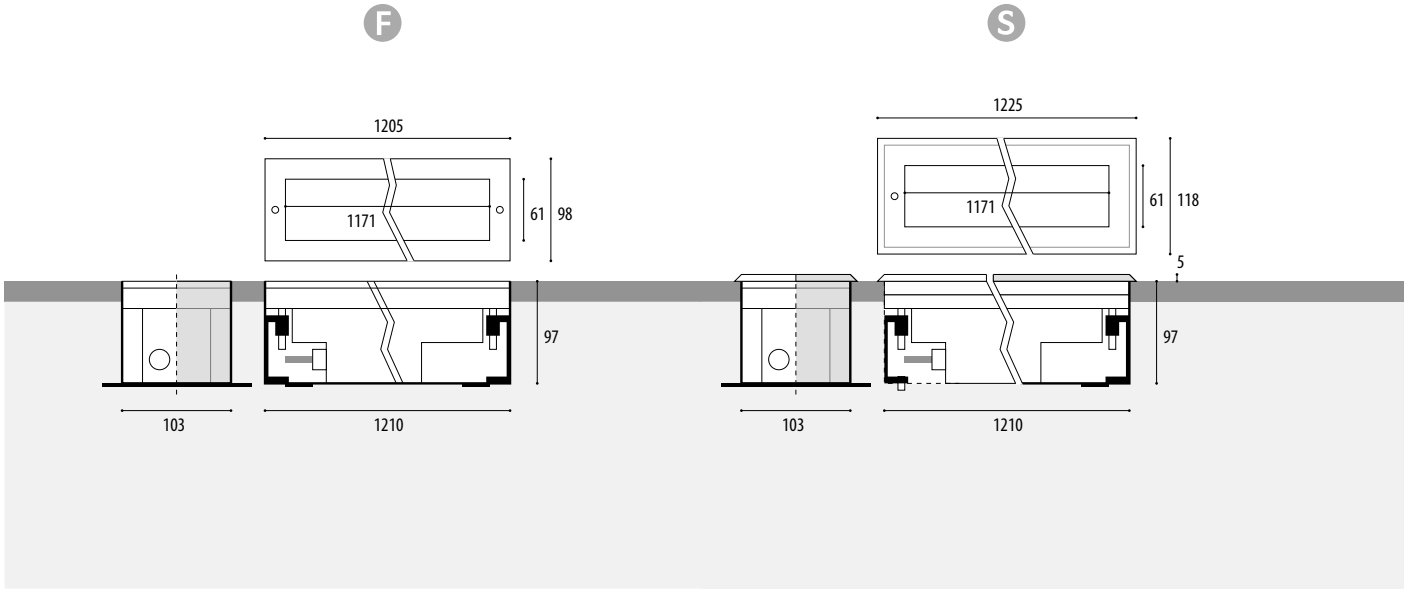

F Article number	S Article number	Lamps	Lumen	Light colour	Wattage	Current/Voltage	Radation angle	Temperature	Cable, installs	[V]
T16										
4.3012.10.54	**4.3012.40.54**	T5	4.450lm	2700K	54W	230V	symmetrisch	<75°C	UW, 3x1,5 qmm	T33
4.3012.11.54	**4.3012.41.54**	T5	4.450lm	2700K	54W	230V	asymmetrisch	<75°C	UW, 3x1,5 qmm	T33
POW-LED, RADATION ANGLE 30° (MEDIUM)										
4.3012.10.11	**4.3012.40.11**	36 POW-LED	5040 lm	6000K cold white	total 43 W	230V	30° medium	<55°C	UW, 3x1,5 qmm	V63
4.3012.10.12	**4.3012.40.12**	36 POW-LED	3600 lm	3000K warm white	total 43 W	230V	30° medium	<55°C	UW, 3x1,5 qmm	
4.3012.10.13	**4.3012.40.13**	36 POW-LED	3960 lm	4500K neutral white	total 43 W	230V	30° medium	<55°C	UW, 3x1,5 qmm	
4.3012.10.19	**4.3012.40.19**	36 POW-LED			all on 43 W	CC 350 mA	30° medium	<55°C	UW, 8x0,5 qmm	
SMD-LED										
4.3012.10.01	**4.3012.40.01**	SMD-LED cold white		6500K	9 W	230V	diffus	<40°C	UW, 3x1,5 qmm	
4.3012.10.02	**4.3012.40.02**	SMD-LED warm white		3000K	9 W	230V	diffus	<40°C	UW, 3x1,5 qmm	
4.3012.10.03	**4.3012.40.03**	SMD-LED neutral white		4000K	9 W	230V	diffus	<40°C	UW, 3x1,5 qmm	
INSTALLATION HOUSING										
4.3012.00.00	**4.3012.00.00**	Installation housing out of 316L stainless steel with 2 terminating elements								
4.3012.01.00		Extension housing out of 316L stainless steel with 2 junction elements								

IP67 EXTERIOR

Power supplies	Technical details see from page 234.
	Integrated
	Integrated
	Integrated
	Integrated
	Integrated
	5.0635.09.50 RGB-Controller, max 1 spotlights
	Integrated
	Integrated
	Integrated

NOTE

Glass surface temperature below 75° (Cool Contact)

CUSTOM MADE

Special designs and customer-specific equipment available on request

In public areas we recommend to use a non-slip glass. See accessories.

OPTIONS

Possible beam angle POW-LED

10° 30° 45° 90° 15x40°

RGB

SMD-LED RGB available

180°

Variant as surface-mounted spotlight available (tiltable from 180 °)

B-G

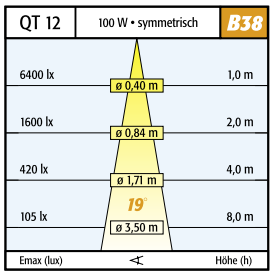
QT 12
100 W • symmetrisch
B38
6400 lx
ø 0,40 m
1,0 m
1600 lx
ø 0,84 m
2,0 m
420 lx
ø 1,71 m
4,0 m
105 lx
19°
ø 3,50 m
8,0 m
Emax (lux)
Höhe (h)

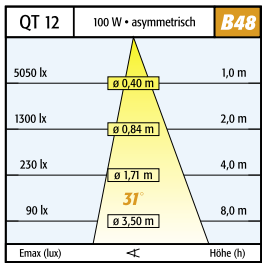
QT 12
100 W • asymmetrisch
B48
5050 lx
ø 0,40 m
1,0 m
1300 lx
ø 0,84 m
2,0 m
230 lx
ø 1,71 m
4,0 m
90 lx
31°
ø 3,50 m
8,0 m
Emax (lux)
Höhe (h)

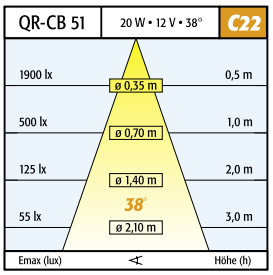
QR-CB 51
20 W • 12 V • 38°
C22
1900 lx
ø 0,35 m
0,5 m
500 lx
ø 0,70 m
1,0 m
125 lx
ø 1,40 m
2,0 m
55 lx
38°
ø 2,10 m
3,0 m
Emax (lux)
Höhe (h)

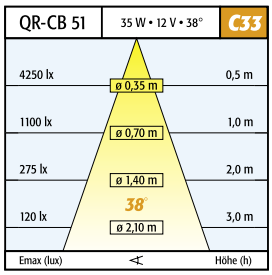
QR-CB 51
35 W • 12 V • 38°
C33
4250 lx
ø 0,35 m
0,5 m
1100 lx
ø 0,70 m
1,0 m
275 lx
ø 1,40 m
2,0 m
120 lx
38°
ø 2,10 m
3,0 m
Emax (lux)
Höhe (h)

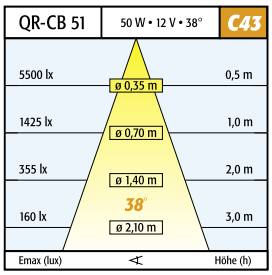
QR-CB 51
50 W • 12 V • 38°
C43
5500 lx
ø 0,35 m
0,5 m
1425 lx
ø 0,70 m
1,0 m
355 lx
ø 1,40 m
2,0 m
160 lx
38°
ø 2,10 m
3,0 m
Emax (lux)
Höhe (h)

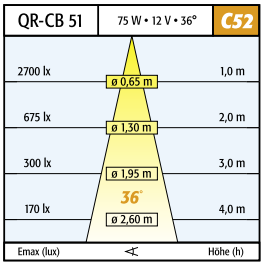
QR-CB 51
75 W • 12 V • 36°
C52
2700 lx
ø 0,65 m
1,0 m
675 lx
ø 1,30 m
2,0 m
300 lx
ø 1,95 m
3,0 m
170 lx
36°
ø 2,60 m
4,0 m
Emax (lux)
Höhe (h)

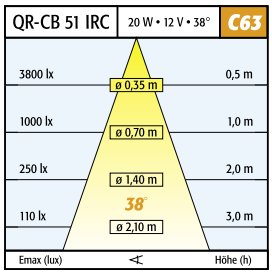
QR-CB 51 IRC
20 W • 12 V • 38°
C63
3800 lx
ø 0,35 m
0,5 m
1000 lx
ø 0,70 m
1,0 m
250 lx
ø 1,40 m
2,0 m
110 lx
38°
ø 2,10 m
3,0 m
Emax (lux)
Höhe (h)

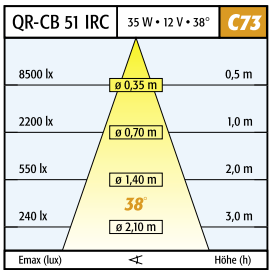
QR-CB 51 IRC
35 W • 12 V • 38°
C73
8500 lx
ø 0,35 m
0,5 m
2200 lx
ø 0,70 m
1,0 m
550 lx
ø 1,40 m
2,0 m
240 lx
38°
ø 2,10 m
3,0 m
Emax (lux)
Höhe (h)

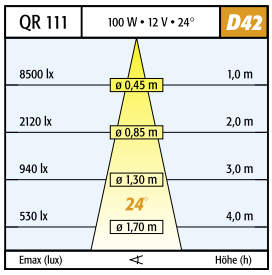
QR 111
100 W • 12 V • 24°
D42
8500 lx
ø 0,45 m
1,0 m
2120 lx
ø 0,85 m
2,0 m
940 lx
ø 1,30 m
3,0 m
530 lx
24°
ø 1,70 m
4,0 m
Emax (lux)
Höhe (h)

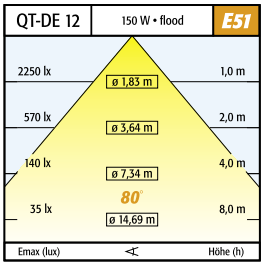
QT-DE 12
150 W • flood
E51
2250 lx
ø 1,83 m
1,0 m
570 lx
ø 3,64 m
2,0 m
140 lx
ø 7,34 m
4,0 m
35 lx
80°
ø 14,69 m
8,0 m
Emax (lux)
Höhe (h)

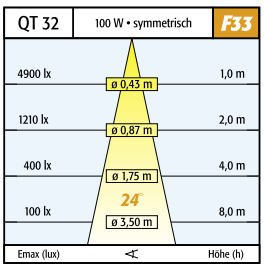
QT 32
100 W • symmetrisch
F33
4900 lx
ø 0,43 m
1,0 m
1210 lx
ø 0,87 m
2,0 m
400 lx
ø 1,75 m
4,0 m
100 lx
24°
ø 3,50 m
8,0 m
Emax (lux)
Höhe (h)

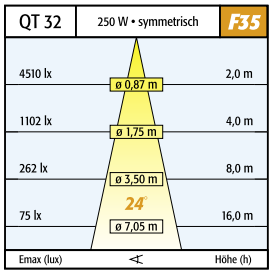
QT 32
250 W • symmetrisch
F35
4510 lx
ø 0,87 m
2,0 m
1102 lx
ø 1,75 m
4,0 m
262 lx
ø 3,50 m
8,0 m
75 lx
24°
ø 7,05 m
16,0 m
Emax (lux)
Höhe (h)

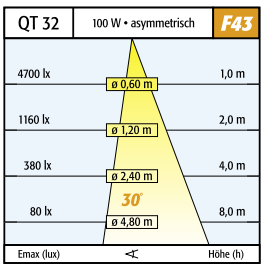
QT 32
100 W • asymmetrisch
F43
4700 lx
ø 0,60 m
1,0 m
1160 lx
ø 1,20 m
2,0 m
380 lx
ø 2,40 m
4,0 m
80 lx
30°
ø 4,80 m
8,0 m
Emax (lux)
Höhe (h)

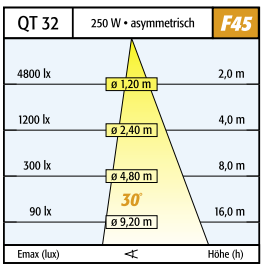
QT 32
250 W • asymmetrisch
F45
4800 lx
ø 1,20 m
2,0 m
1200 lx
ø 2,40 m
4,0 m
300 lx
ø 4,80 m
8,0 m
90 lx
30°
ø 9,20 m
16,0 m
Emax (lux)
Höhe (h)

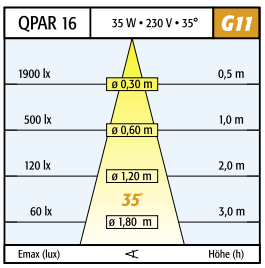
QPAR 16
35 W • 230 V • 35°
G11
1900 lx
ø 0,30 m
0,5 m
500 lx
ø 0,60 m
1,0 m
120 lx
ø 1,20 m
2,0 m
60 lx
35°
ø 1,80 m
3,0 m
Emax (lux)
Höhe (h)

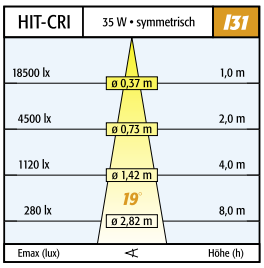
HIT-CRI
35 W • symmetrisch
I31
18500 lx
ø 0,37 m
1,0 m
4500 lx
ø 0,73 m
2,0 m
1120 lx
ø 1,42 m
4,0 m
19°
280 lx
ø 2,82 m
8,0 m
Emax (lux)
Höhe (h)

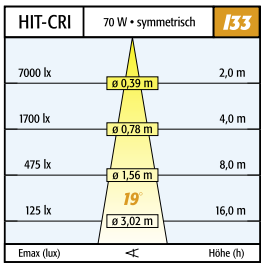
HIT-CRI
70 W • symmetrisch
I33
7000 lx
ø 0,39 m
2,0 m
1700 lx
ø 0,78 m
4,0 m
475 lx
ø 1,56 m
8,0 m
19°
125 lx
ø 3,02 m
16,0 m
Emax (lux)
Höhe (h)

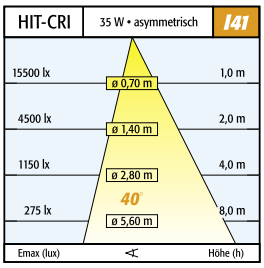
HIT-CRI
35 W • asymmetrisch
I41
15500 lx
ø 0,70 m
1,0 m
4500 lx
ø 1,40 m
2,0 m
1150 lx
ø 2,80 m
4,0 m
40°
275 lx
ø 5,60 m
8,0 m
Emax (lux)
Höhe (h)

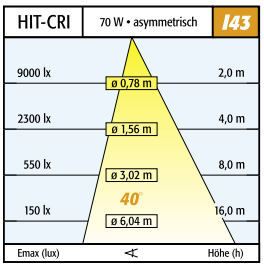
HIT-CRI
70 W • asymmetrisch
I43
9000 lx
ø 0,78 m
2,0 m
2300 lx
ø 1,56 m
4,0 m
550 lx
ø 3,02 m
8,0 m
40°
150 lx
ø 6,04 m
16,0 m
Emax (lux)
Höhe (h)

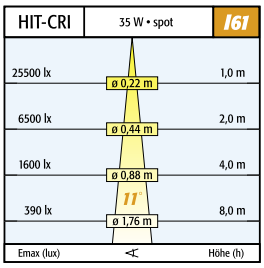
HIT-CRI
35 W • spot
I61
25500 lx
ø 0,22 m
1,0 m
6500 lx
ø 0,44 m
2,0 m
1600 lx
ø 0,88 m
4,0 m
11°
390 lx
ø 1,76 m
8,0 m
Emax (lux)
Höhe (h)

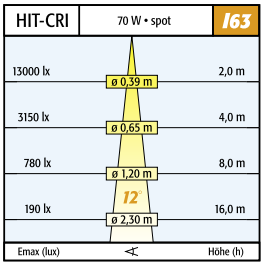
HIT-CRI
70 W • spot
I63
13000 lx
ø 0,39 m
2,0 m
3150 lx
ø 0,65 m
4,0 m
780 lx
ø 1,20 m
8,0 m
12°
190 lx
ø 2,30 m
16,0 m
Emax (lux)
Höhe (h)

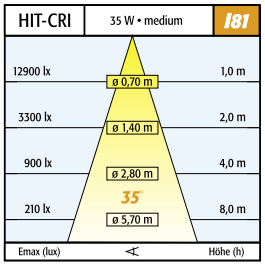
HIT-CRI
35 W • medium
I81
12900 lx
ø 0,70 m
1,0 m
3300 lx
ø 1,40 m
2,0 m
900 lx
ø 2,80 m
4,0 m
35°
210 lx
ø 5,70 m
8,0 m
Emax (lux)
Höhe (h)

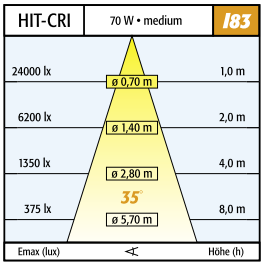
HIT-CRI
70 W • medium
I83
24000 lx
ø 0,70 m
1,0 m
6200 lx
ø 1,40 m
2,0 m
1350 lx
ø 2,80 m
4,0 m
35°
375 lx
ø 5,70 m
8,0 m
Emax (lux)
Höhe (h)

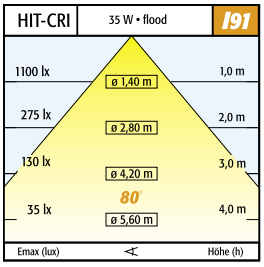
HIT-CRI
35 W • flood
I91
1100 lx
ø 1,40 m
1,0 m
275 lx
ø 2,80 m
2,0 m
130 lx
ø 4,20 m
3,0 m
80°
35 lx
ø 5,60 m
4,0 m
Emax (lux)
Höhe (h)

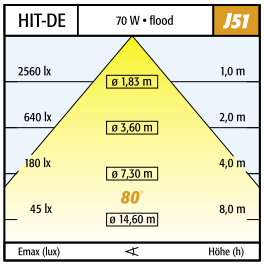
HIT-DE
70 W • flood
J51
2560 lx
ø 1,83 m
1,0 m
640 lx
ø 3,60 m
2,0 m
180 lx
ø 7,30 m
4,0 m
80°
45 lx
ø 14,60 m
8,0 m
Emax (lux)
Höhe (h)

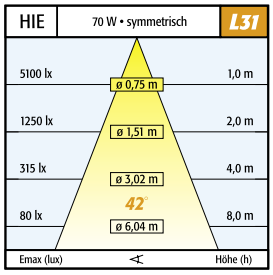
HIE
70 W • symmetrisch
L31
5100 lx
ø 0,75 m
1,0 m
1250 lx
ø 1,51 m
2,0 m
315 lx
ø 3,02 m
4,0 m
42°
80 lx
ø 6,04 m
8,0 m
Emax (lux)
Höhe (h)

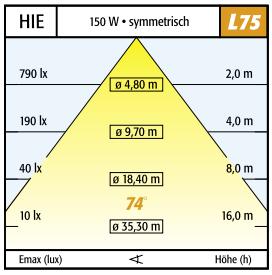
HIE
150 W • symmetrisch
L75
790 lx
ø 4,80 m
2,0 m
190 lx
ø 9,70 m
4,0 m
40 lx
ø 18,40 m
8,0 m
74°
10 lx
ø 35,30 m
16,0 m
Emax (lux)
Höhe (h)

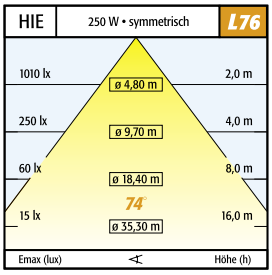
HIE
250 W • symmetrisch
L76
1010 lx
ø 4,80 m
2,0 m
250 lx
ø 9,70 m
4,0 m
60 lx
ø 18,40 m
8,0 m
74°
15 lx
ø 35,30 m
16,0 m
Emax (lux)
Höhe (h)

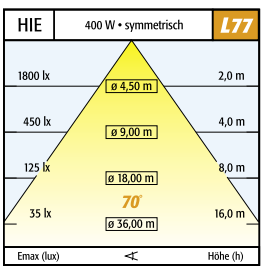
HIE
400 W • symmetrisch
L77
1800 lx
ø 4,50 m
2,0 m
450 lx
ø 9,00 m
4,0 m
125 lx
ø 18,00 m
8,0 m
70°
35 lx
ø 36,00 m
16,0 m
Emax (lux)
Höhe (h)

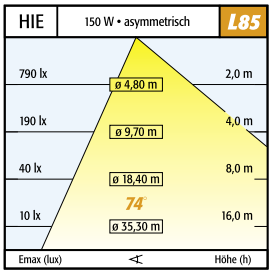
HIE
150 W • asymmetrisch
L85
790 lx
ø 4,80 m
2,0 m
190 lx
ø 9,70 m
4,0 m
40 lx
ø 18,40 m
8,0 m
74°
10 lx
ø 35,30 m
16,0 m
Emax (lux)
Höhe (h)

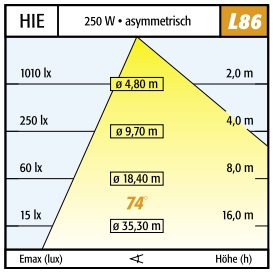
HIE
250 W • asymmetrisch
L86
1010 lx
ø 4,80 m
2,0 m
250 lx
ø 9,70 m
4,0 m
60 lx
ø 18,40 m
8,0 m
74°
15 lx
ø 35,30 m
16,0 m
Emax (lux)
Höhe (h)

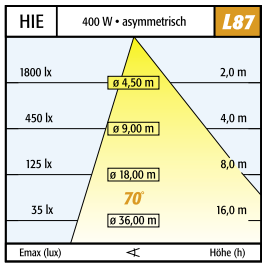
HIE
400 W • asymmetrisch
L87
1800 lx
ø 4,50 m
2,0 m
450 lx
ø 9,00 m
4,0 m
125 lx
ø 18,00 m
8,0 m
70°
35 lx
ø 36,00 m
16,0 m
Emax (lux)
Höhe (h)

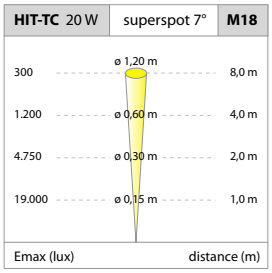
HIT-TC 20 W
superspot 7°
M18
ø 1,20 m
300
8,0 m
1.200
ø 0,60 m
4,0 m
4.750
ø 0,30 m
2,0 m
19.000
ø 0,15 m
1,0 m
Emax (lux)
distance (m)

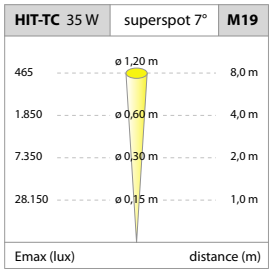
HIT-TC 35 W
superspot 7°
M19
ø 1,20 m
465
8,0 m
1.850
ø 0,60 m
4,0 m
7.350
ø 0,30 m
2,0 m
28.150
ø 0,15 m
1,0 m
Emax (lux)
distance (m)

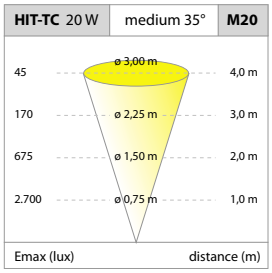
HIT-TC 20 W
medium 35°
M20
ø 3,00 m
45
4,0 m
170
ø 2,25 m
3,0 m
675
ø 1,50 m
2,0 m
2.700
ø 0,75 m
1,0 m
Emax (lux)
distance (m)

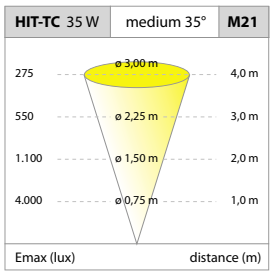
HIT-TC 35 W
medium 35°
M21
ø 3,00 m
275
4,0 m
550
ø 2,25 m
3,0 m
1.100
ø 1,50 m
2,0 m
4.000
ø 0,75 m
1,0 m
Emax (lux)
distance (m)

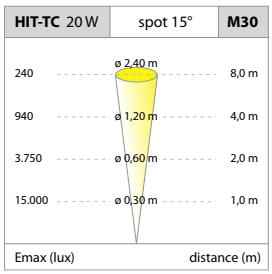
HIT-TC 20 W
spot 15°
M30
ø 2,40 m
240
8,0 m
940
ø 1,20 m
4,0 m
3.750
ø 0,60 m
2,0 m
15.000
ø 0,30 m
1,0 m
Emax (lux)
distance (m)

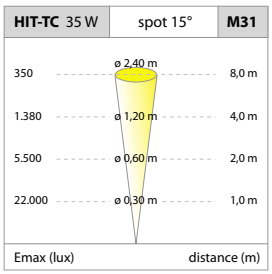
HIT-TC 35 W
spot 15°
M31
ø 2,40 m
350
8,0 m
1.380
ø 1,20 m
4,0 m
5.500
ø 0,60 m
2,0 m
22.000
ø 0,30 m
1,0 m
Emax (lux)
distance (m)

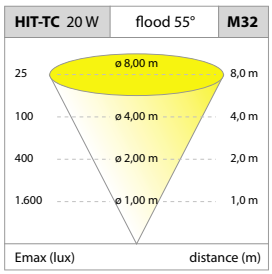
HIT-TC 20 W
flood 55°
M32
ø 8,00 m
25
8,0 m
100
ø 4,00 m
4,0 m
400
ø 2,00 m
2,0 m
1.600
ø 1,00 m
1,0 m
Emax (lux)
distance (m)

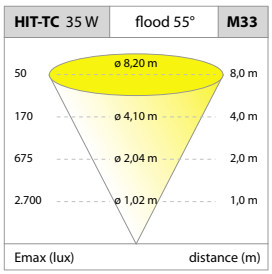
HIT-TC 35 W
flood 55°
M33
ø 8,20 m
50
8,0 m
170
ø 4,10 m
4,0 m
675
ø 2,04 m
2,0 m
2.700
ø 1,02 m
1,0 m
Emax (lux)
distance (m)

P-R

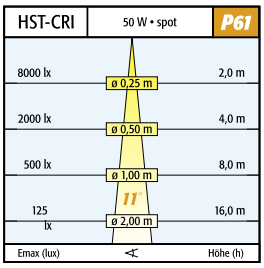
HST-CRI
50 W • spot
P61
8000 lx
ø 0,25 m
2,0 m
2000 lx
ø 0,50 m
4,0 m
500 lx
ø 1,00 m
8,0 m
11°
125 lx
ø 2,00 m
16,0 m
Emax (lux)
Höhe (h)

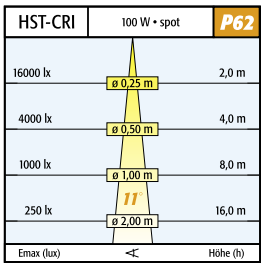
HST-CRI
100 W • spot
P62
16000 lx
ø 0,25 m
2,0 m
4000 lx
ø 0,50 m
4,0 m
1000 lx
ø 1,00 m
8,0 m
11°
250 lx
ø 2,00 m
16,0 m
Emax (lux)
Höhe (h)

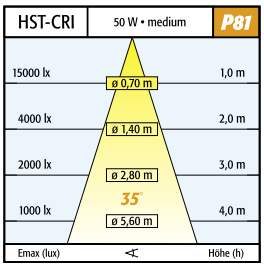
HST-CRI
50 W • medium
P81
15000 lx
ø 0,70 m
1,0 m
4000 lx
ø 1,40 m
2,0 m
2000 lx
ø 2,80 m
3,0 m
35°
1000 lx
ø 5,60 m
4,0 m
Emax (lux)
Höhe (h)

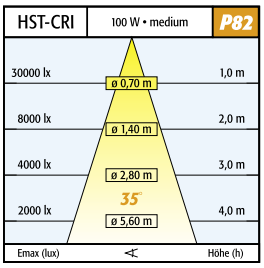
HST-CRI
100 W • medium
P82
30000 lx
ø 0,70 m
1,0 m
8000 lx
ø 1,40 m
2,0 m
4000 lx
ø 2,80 m
3,0 m
35°
2000 lx
ø 5,60 m
4,0 m
Emax (lux)
Höhe (h)

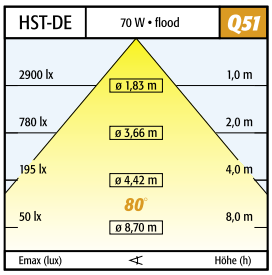
HST-DE
70 W • flood
Q51
2900 lx
ø 1,83 m
1,0 m
780 lx
ø 3,66 m
2,0 m
195 lx
ø 4,42 m
4,0 m
80°
50 lx
ø 8,70 m
8,0 m
Emax (lux)
Höhe (h)

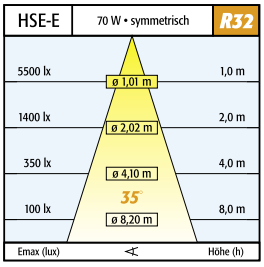
HSE-E
70 W • symmetrisch
R32
5500 lx
ø 1,01 m
1,0 m
1400 lx
ø 2,02 m
2,0 m
350 lx
ø 4,10 m
4,0 m
35°
100 lx
ø 8,20 m
8,0 m
Emax (lux)
Höhe (h)

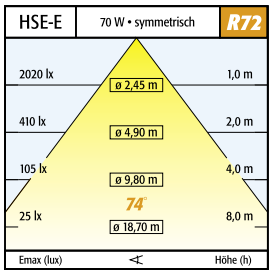
HSE-E
70 W • symmetrisch
R72
2020 lx
ø 2,45 m
1,0 m
410 lx
ø 4,90 m
2,0 m
105 lx
ø 9,80 m
4,0 m
74°
25 lx
ø 18,70 m
8,0 m
Emax (lux)
Höhe (h)

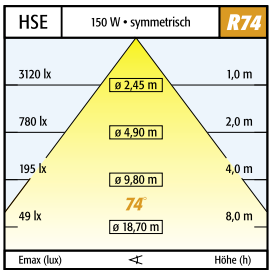
HSE
150 W • symmetrisch
R74
3120 lx
ø 2,45 m
1,0 m
780 lx
ø 4,90 m
2,0 m
195 lx
ø 9,80 m
4,0 m
74°
49 lx
ø 18,70 m
8,0 m
Emax (lux)
Höhe (h)

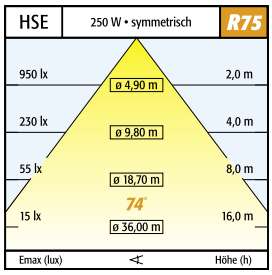
HSE
250 W • symmetrisch
R75
950 lx
ø 4,90 m
2,0 m
230 lx
ø 9,80 m
4,0 m
55 lx
ø 18,70 m
8,0 m
74°
15 lx
ø 36,00 m
16,0 m
Emax (lux)
Höhe (h)

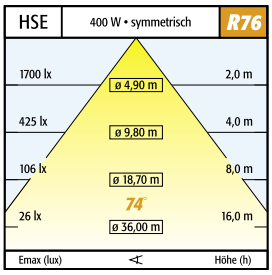
HSE
400 W • symmetrisch
R76
1700 lx
ø 4,90 m
2,0 m
425 lx
ø 9,80 m
4,0 m
106 lx
ø 18,70 m
8,0 m
74°
26 lx
ø 36,00 m
16,0 m
Emax (lux)
Höhe (h)

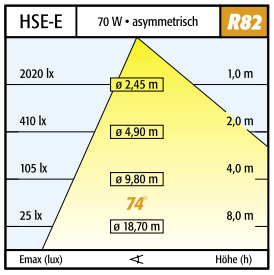
HSE-E
70 W • asymmetrisch
R82
2020 lx
ø 2,45 m
1,0 m
410 lx
ø 4,90 m
2,0 m
105 lx
ø 9,80 m
4,0 m
74°
25 lx
ø 18,70 m
8,0 m
Emax (lux)
Höhe (h)

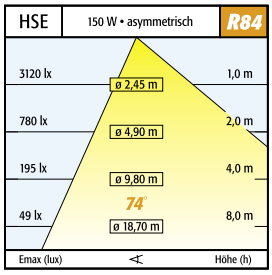
HSE
150 W • asymmetrisch
R84
3120 lx
ø 2,45 m
1,0 m
780 lx
ø 4,90 m
2,0 m
195 lx
ø 9,80 m
4,0 m
74°
49 lx
ø 18,70 m
8,0 m
Emax (lux)
Höhe (h)

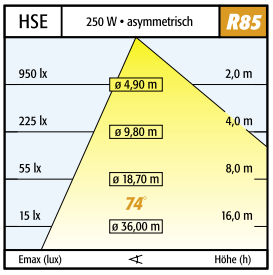
HSE
250 W • asymmetrisch
R85
950 lx
ø 4,90 m
2,0 m
225 lx
ø 9,80 m
4,0 m
55 lx
ø 18,70 m
8,0 m
74°
15 lx
ø 36,00 m
16,0 m
Emax (lux)
Höhe (h)

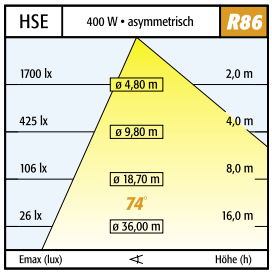
HSE
400 W • asymmetrisch
R86
1700 lx
ø 4,80 m
2,0 m
425 lx
ø 9,80 m
4,0 m
106 lx
ø 18,70 m
8,0 m
74°
26 lx
ø 36,00 m
16,0 m
Emax (lux)
Höhe (h)

T-V

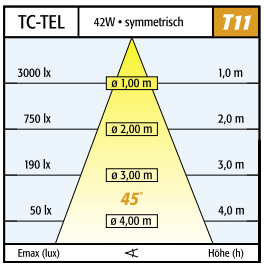
TC-TEL
42W • symmetrisch
T11
3000 lx
ø 1,00 m
1,0 m
750 lx
ø 2,00 m
2,0 m
190 lx
ø 3,00 m
3,0 m
45°
50 lx
ø 4,00 m
4,0 m
Emax (lux)
Höhe (h)

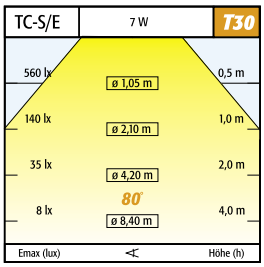
TC-S/E
7 W
T30
560 lx
ø 1,05 m
0,5 m
140 lx
ø 2,10 m
1,0 m
35 lx
ø 4,20 m
2,0 m
80°
8 lx
ø 8,40 m
4,0 m
Emax (lux)
Höhe (h)

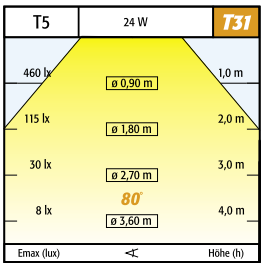
T5
24 W
T31
460 lx
ø 0,90 m
1,0 m
115 lx
ø 1,80 m
2,0 m
30 lx
ø 2,70 m
3,0 m
80°
8 lx
ø 3,60 m
4,0 m
Emax (lux)
Höhe (h)

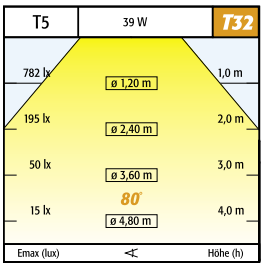
T5
39 W
T32
782 lx
ø 1,20 m
1,0 m
195 lx
ø 2,40 m
2,0 m
50 lx
ø 3,60 m
3,0 m
80°
15 lx
ø 4,80 m
4,0 m
Emax (lux)
Höhe (h)

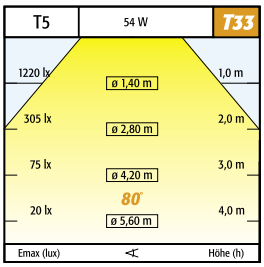
T5
54 W
T33
1220 lx
ø 1,40 m
1,0 m
305 lx
ø 2,80 m
2,0 m
75 lx
ø 4,20 m
3,0 m
80°
20 lx
ø 5,60 m
4,0 m
Emax (lux)
Höhe (h)

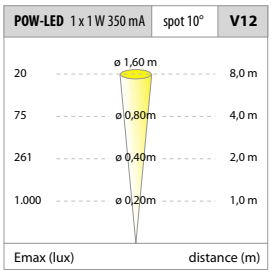
POW-LED 1 x 1 W 350 mA
spot 10°
V12
20
ø 1,60 m
8,0 m
75
ø 0,80m
4,0 m
261
ø 0,40m
2,0 m
1.000
ø 0,20m
1,0 m
Emax (lux)
distance (m)

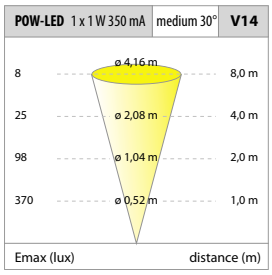
POW-LED 1 x 1 W 350 mA
medium 30°
V14
8
ø 4,16 m
8,0 m
25
ø 2,08 m
4,0 m
98
ø 1,04 m
2,0 m
370
ø 0,52 m
1,0 m
Emax (lux)
distance (m)

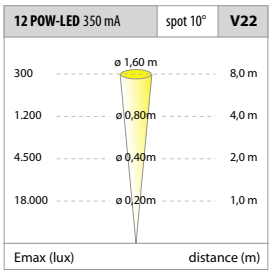
12 POW-LED 350 mA
spot 10°
V22
300
ø 1,60 m
8,0 m
1.200
ø 0,80m
4,0 m
4.500
ø 0,40m
2,0 m
18.000
ø 0,20m
1,0 m
Emax (lux)
distance (m)

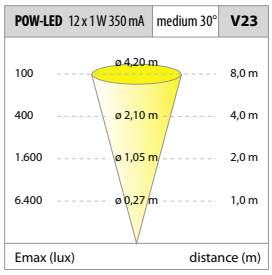
POW-LED 12 x 1 W 350 mA
medium 30°
V23
100
ø 4,20 m
8,0 m
400
ø 2,10 m
4,0 m
1.600
ø 1,05 m
2,0 m
6.400
ø 0,27 m
1,0 m
Emax (lux)
distance (m)

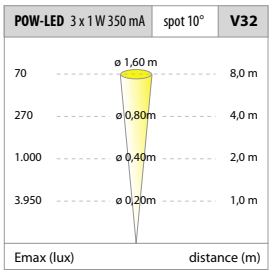
POW-LED 3 x 1 W 350 mA
spot 10°
V32
70
ø 1,60 m
8,0 m
270
ø 0,80m
4,0 m
1.000
ø 0,40m
2,0 m
3.950
ø 0,20m
1,0 m
Emax (lux)
distance (m)

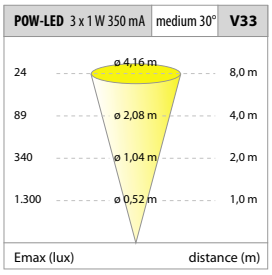
POW-LED 3 x 1 W 350 mA
medium 30°
V33
24
ø 4,16 m
8,0 m
89
ø 2,08 m
4,0 m
340
ø 1,04 m
2,0 m
1.300
ø 0,52 m
1,0 m
Emax (lux)
distance (m)

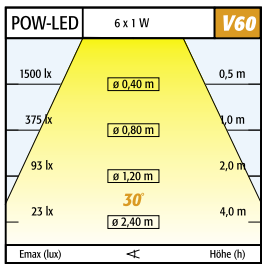
POW-LED
6 x 1 W
V60
1500 lx
ø 0,40 m
0,5 m
375 lx
ø 0,80 m
1,0 m
93 lx
ø 1,20 m
2,0 m
30°
23 lx
ø 2,40 m
4,0 m
Emax (lux)
Höhe (h)

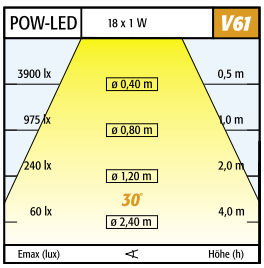
POW-LED
18 x 1 W
V61
3900 lx
ø 0,40 m
0,5 m
975 lx
ø 0,80 m
1,0 m
240 lx
ø 1,20 m
2,0 m
30°
60 lx
ø 2,40 m
4,0 m
Emax (lux)
Höhe (h)

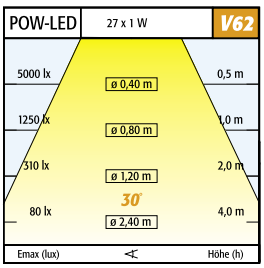
POW-LED
27 x 1 W
V62
5000 lx
ø 0,40 m
0,5 m
1250 lx
ø 0,80 m
1,0 m
310 lx
ø 1,20 m
2,0 m
30°
80 lx
ø 2,40 m
4,0 m
Emax (lux)
Höhe (h)

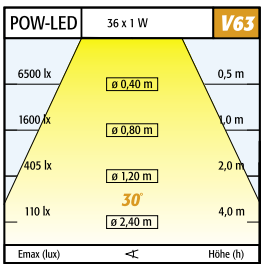
POW-LED
36 x 1 W
V63
6500 lx
ø 0,40 m
0,5 m
1600 lx
ø 0,80 m
1,0 m
405 lx
ø 1,20 m
2,0 m
30°
110 lx
ø 2,40 m
4,0 m
Emax (lux)
Höhe (h)

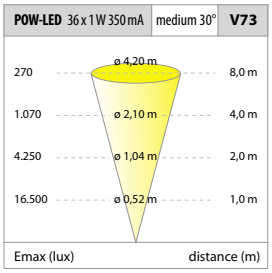
POW-LED 36 x 1 W 350 mA
medium 30°
V73
270
ø 4,20 m
8,0 m
1.070
ø 2,10 m
4,0 m
4.250
ø 1,04 m
2,0 m
16.500
ø 0,52 m
1,0 m
Emax (lux)
distance (m)

5
4

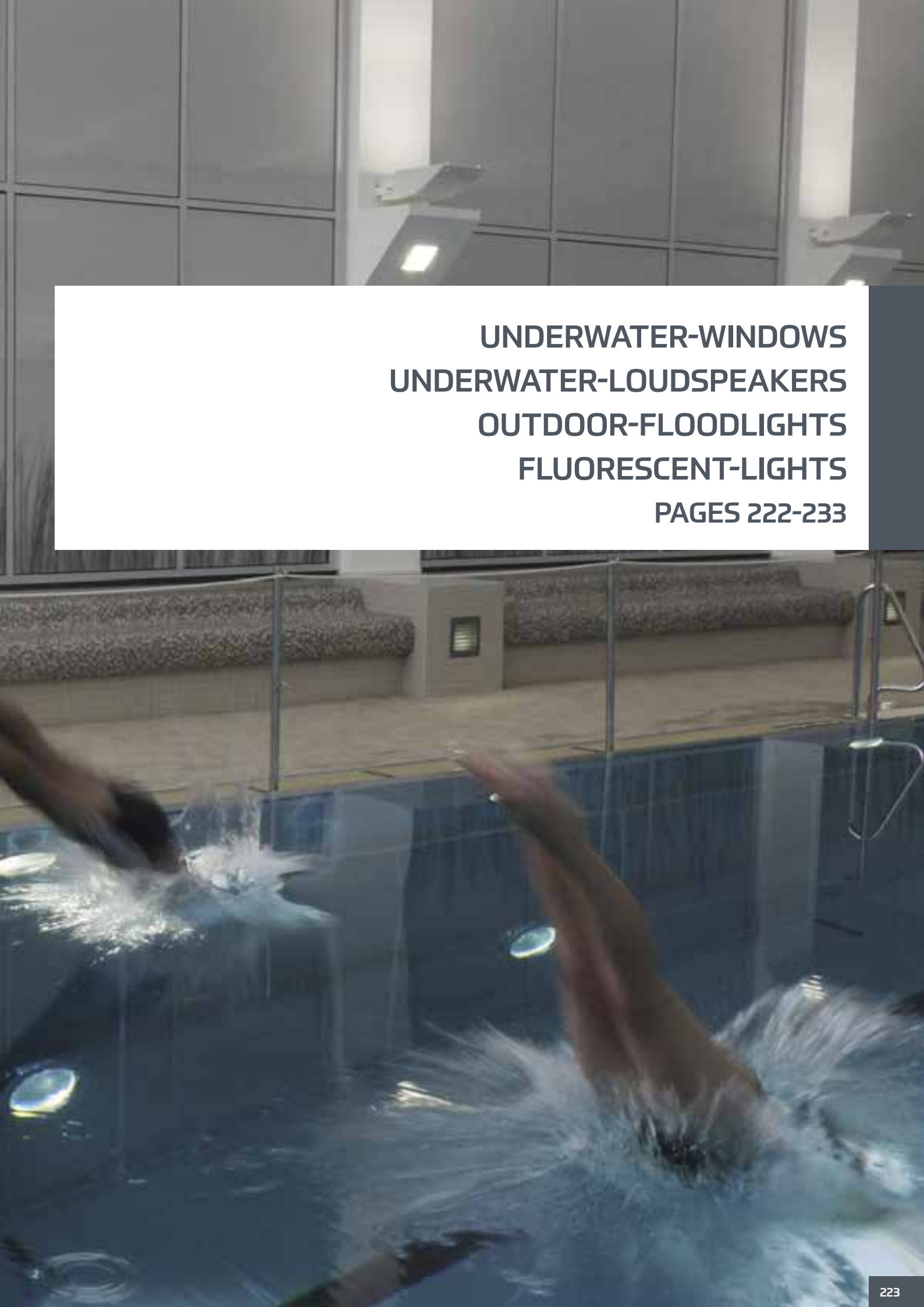

UNDERWATER-WINDOWS
UNDERWATER-LOUDSPEAKERS
OUTDOOR-FLOODLIGHTS
FLUORESCENT-LIGHTS

PAGES 222-233

UNDERWATER-WINDOWS 4.2500

UNDERWATER | IP68

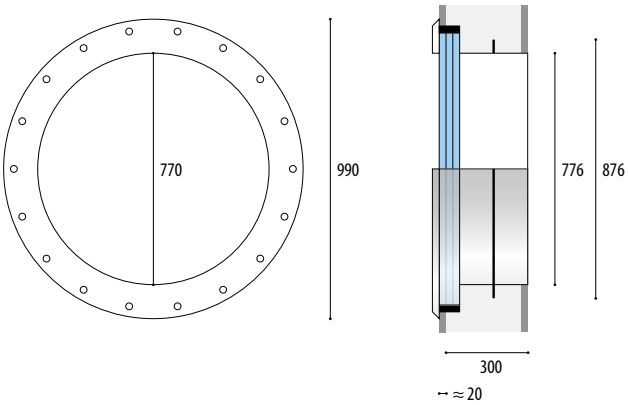

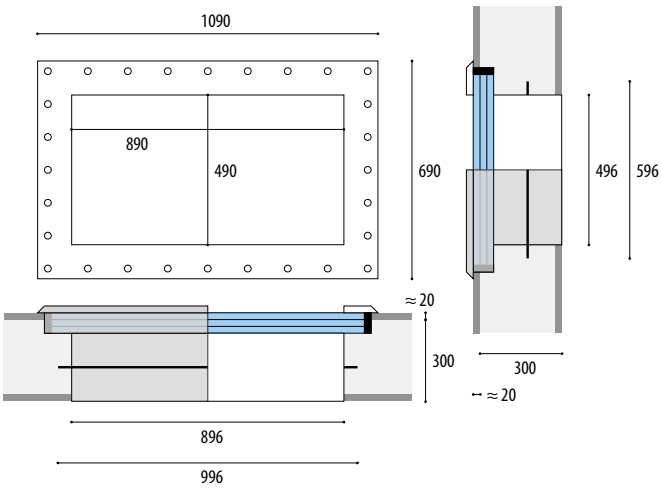

Article number	Dimensions	Weight
TILED CONCRETE POOLS (TILES + MORTAR 15–20 MM)		
4.2500.00.00	1090 x 690 mm	150 kg
4.2600.00.00	ø 990 mm	120 kg

4.2500 | UNDERWATER-WINDOWS

BUILT IN PART FOR SAFETY RELATED PURPOSES AND AS ARCHITECTURAL DESIGN ELEMENT.

IP68 | STAINLESS STEEL V4A 1.4571 316Ti | max 3m | CE

- Protection class IP68 – up to 3m water depth
- Entirely made of stainless steel 316Ti 1.4571
- cover, height 8 mm
- Sturdy marine grade 316Ti stainless steel construction with toughened safety glass
- Sealed via special silicon seals
- Varying glass thickness according to the size of the window
- For swimming pools with walkaround or surrounding shaft
- Wall installation possible in all standard pool types

NOTE

CUSTOM MADE

Customer-specific installations and special designs available on request.

PRODUCT LINE

4.1914
Underwater-Windows
> Page 226

OPTIONS

CUSTOM MADE

Variants for metal or plastic film pools available on request.

UNDERWATER-WINDOWS 4.1914

UNDERWATER | IP68

00 TILED CONCRETE POOLS (TILES + MORTAR 15–20 MM)

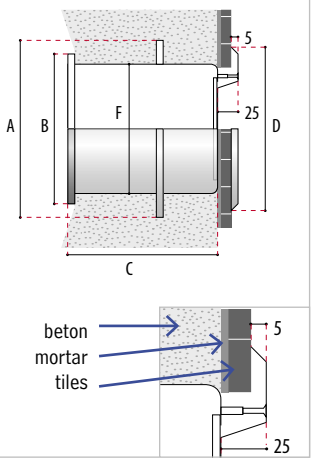

01 CONCRETE POOLS WITH FITTED FOIL (PRESSURE FLANGE)

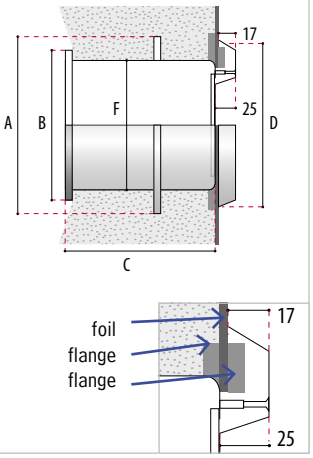

02 THIN-WALLED POOLS (PRESSURE FLANGE)

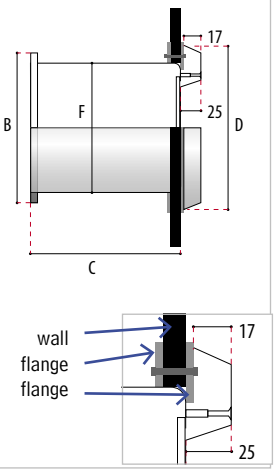

03 POOLS WITH ADHESIVE/FOIL COATINGS (ADHESIVE FLANGE)

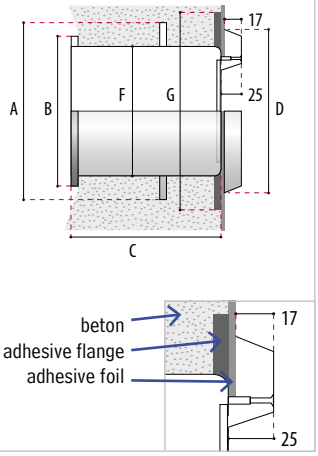

04 STAINLESS STEEL POOLS (WELDED FLANGE)

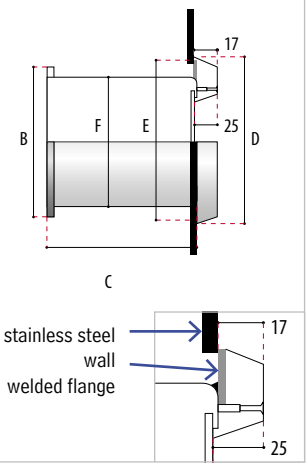

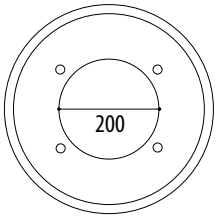

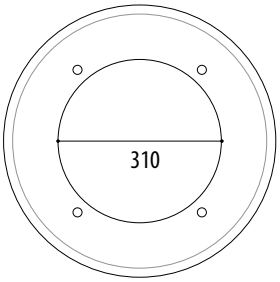

00 Article number	01 Article number	02 Article number	03 Article number	04 Article number	Dimensions	Weight
4.1914.00.00					A 380 x B 330 x C 350 x D 350 x F 283	16 kg
4.2112.00.00					A 500 x B 473 x C 240 x D 490 x F 403	18,5 kg
4.2113.00.00					A 500 x B 473 x C 440 x D 490 x F 403	23,5 kg
	4.1914.01.00				A 380 x B 330 x C 350 x D 350 x F 283	16 kg
	4.2112.01.00				A 500 x B 473 x C 240 x D 490 x F 403	18,5 kg
	4.2113.01.00				A 500 x B 473 x C 440 x D 490 x F 403	23,5 kg
		4.1914.02.00			B 330 x C 350 x D 350 x F 283	16 kg
		4.2112.02.00			B 473 x C 240 x D 490 x F 403	18,5 kg
		4.2113.02.00			B 473 x C 440 x D 485 x F 403	23,5 kg
			4.1914.03.00		A 380 x B 330 x C 350 x D 350 x F 283 x G 383	16 kg
			4.2112.03.00		A 500 x B 473 x C 240 x D 490 x F 403 x G 503	18,5 kg
			4.2113.03.00		A 500 x B 473 x C 440 x D 490 x F 403 x G 503	23,5 kg
				4.1914.04.00	B 330 x C 350 x D 350 x E 338 x F 283	16 kg
				4.2112.04.00	B 473 x C 240 x D 490 x E 485 x F 403	18,5 kg
				4.2113.04.00	B 473 x C 440 x D 490 x E 485 x F 403	23,5 kg

4.1914 | UNDERWATER-WINDOWS

BUILT IN PART FOR SAFETY RELATED PURPOSES AND AS ARCHITECTURAL DESIGN ELEMENT.

IP68 | STAINLESS STEEL V4A 1.4571 316Ti | max 3m | CE

- Protection class IP68 – up to 3m water depth
- Entirely made of stainless steel 316Ti 1.4571
- round cover, height 5 or 17 mm
- Sturdy marine grade 316Ti stainless steel construction with toughened safety glass
- Sealed via special silicon seals
- Varying glass thickness according to the size of the window
- For swimming pools with walkaround or surrounding shaft
- Wall installation possible in all standard pool types

PRODUCT LINE

4.2500
Underwater-Windows
> Page 224

4.1900
Recessed spotlights (underwater)
> Page 78

4.2000
Recessed spotlights (underwater)
> Page 82

NOTE

CUSTOM MADE

Customer-specific installations and special designs available on request.

UNDERWATER-LOUDSPEAKERS

UNDERWATER IP68

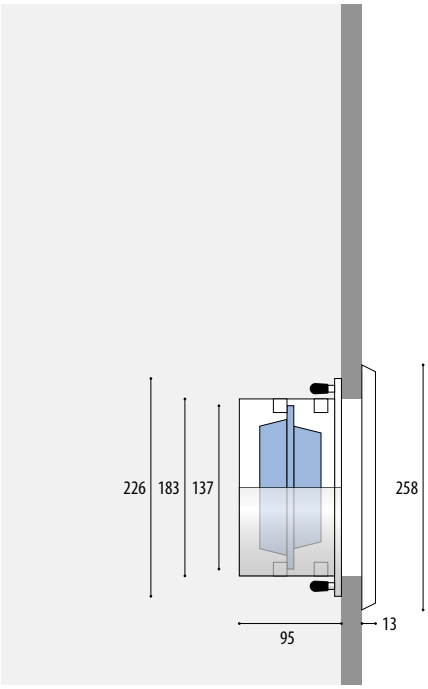

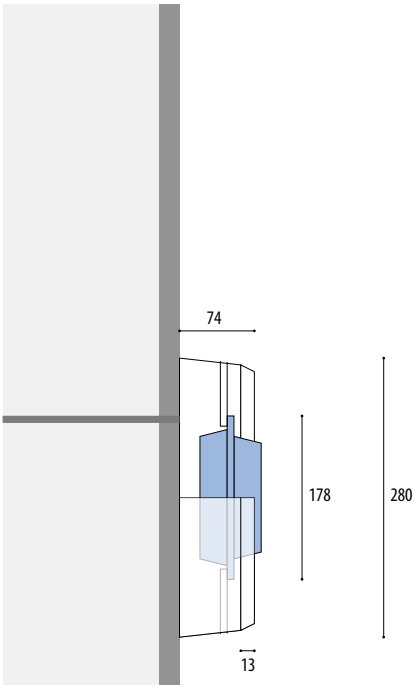

Article number	Frequency Range	Input Power Handling	Impedance	Mounting depht	Weight
WITH BUILT-IN POT FOR CONCRETE LINED POOLS					
4.0014.00.07	100 Hz-10 kHz	max 30 W	8 Ω	0,6-1,0 m	4,5 kg
WITH BUILT-IN POT/FOIL LINED					
4.0014.01.07	100 Hz-10 kHz	max 30 W	8 Ω	0,6-1,0 m	4,7 kg
WITH BUILT-IN POT/ADHESIVE/FOIL COATING (ADHESIVE FLANGE)					
4.0014.03.07	100 Hz-10 kHz	max 30 W	8 Ω	0,6-1,0 m	4,7 kg
FOR MOUNTING LATER ON THE SIDES OF POOLS					
4.0016.00.00	100 Hz-10 kHz	max 30 W	8 Ω	0,6-1,0 m	4,7 kg
TO HANG ON THE EDGE OF POOLS					
4.0017.00.00	100 Hz-10 kHz	max 30 W	8 Ω	0,6-1,0 m	5,3 kg

4.0014 | UNDERWATER-LOUDSPEAKER

UNDERWATERSOUND FOR HOTELPOOLS, LEISURE AND COMPETITION POOLS.

IP68 | STAINLESS STEEL V4A 1.4571 316Ti | CABLE INCL. | max 3m

- Available in various flush-mounted and surface-mounted variants:
- Flush-mounted installation in a marine grade 316Ti stainless steel housing
- With moulded plastic component for retrofit wall installation
- For mobile use hanging over the edge of the pool
- Cover is made of shatter-proof plastic
- Supplied with a 15 m length of connecting cable

ADDITIONAL PARTS

Stainless steel front diaphragm
258 x 13 mm
4.0012.00.00

Stainless steel front diaphragm, flush mounted
ø 238 mm
4.0012.75.00

Underwater-Loudspeaker
single
185 x 65 mm
4.0018.00.00

Underwater-Loudspeaker
single
137 x 53 mm
4.0018.00.07

Installation housing
226 x 95 x 182 mm
4.0013.00.07

Plastic front diaphragm
245 x 12 mm
9.0014.02.00

ELA output transducer
100 V/8 Ω
185 x 65 mm
9.0014.18.00

NOTE

The number of loudspeakers required depends on the pool architecture. Please check in advance.

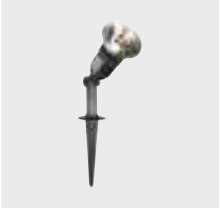

OUTDOOR-FLOODLIGHT

IP54 | EXCL. | CABLE INCL. | CE

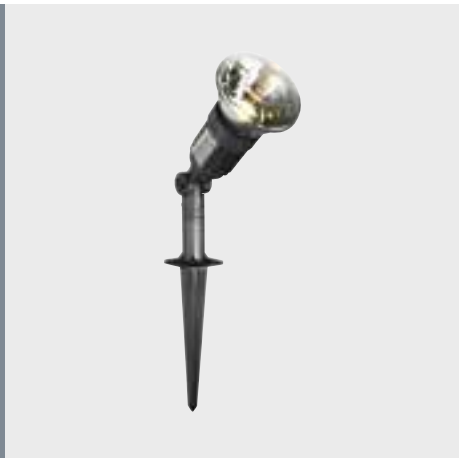

- Protection system IP54
- with ground stake
- (6.0159) Garden spotlight with 2 holders, 6 m of connecting cable and plug
- (6.1516) Garden spotlight with 6 m connecting cable and plug
- (6.0154) Socket, double, with 6 m connecting cable and plug
- Supplied without light source

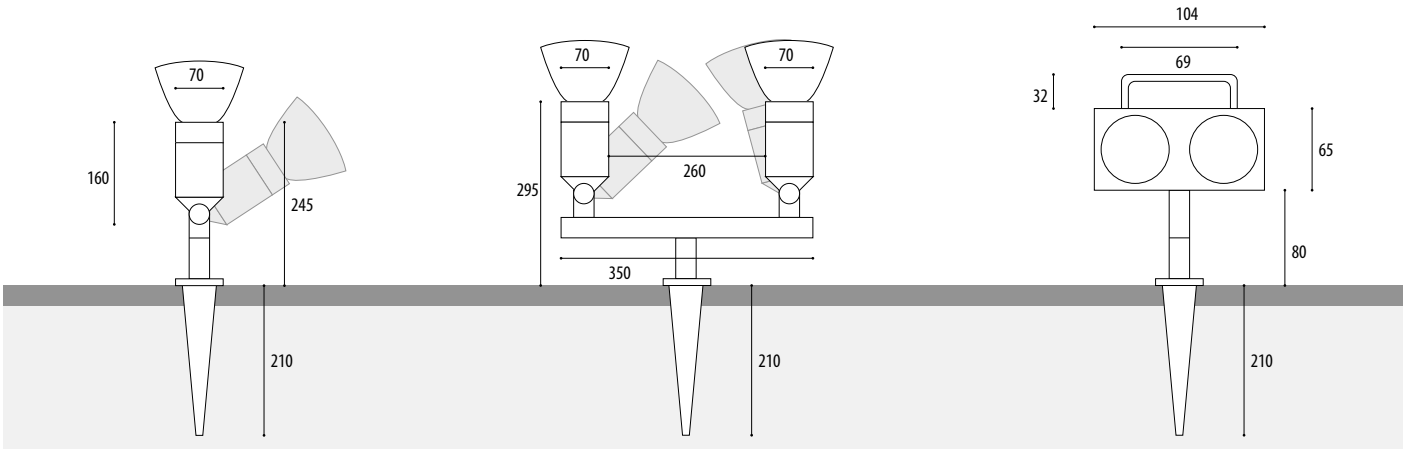

Article number	Lamps	Wattage	V/mA	Socket	Radation angle
GARDEN SPOTLIGHT WITH 2 HOLDERS, 6 M OF CONNECTING CABLE AND PLUG					
6.0159.01.84	PAR38	120W	230V	E27	30°
GARDEN SPOTLIGHT WITH 6 M CONNECTING CABLE AND PLUG					
6.1516.01.84	PAR38	120W	230V	E27	30°
SOCKET, DOUBLE, WITH 6 M CONNECTING CABLE AND PLUG					
6.0154.01.84		6 Ampere	230V		

OUTDOOR-FLOODLIGHT

IP54 | EXCL. | CABLE INCL. | CE

- Protection system IP54
- (6.0152) with one holder for wall and ceiling installation, available in black and white
- (6.0158) wall bars with 2 holders, for wall or ceiling installation, available in black and white
- (6.0164) wall bars with 3 holders, for wall or ceiling installation, available in black
- (6.1500) one holder, length 750 mm, available in black and white
- (6.1600) one holder, length 1000 mm, available in black and white
- Supplied without light source

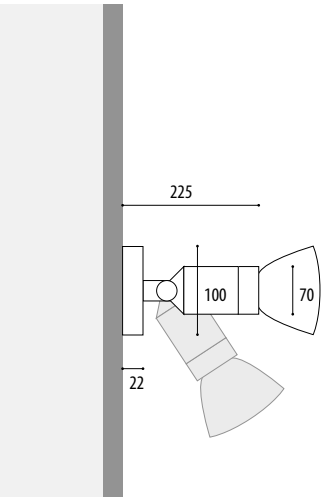

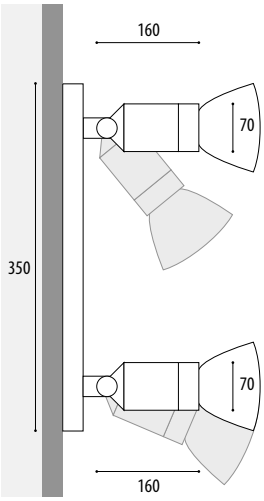

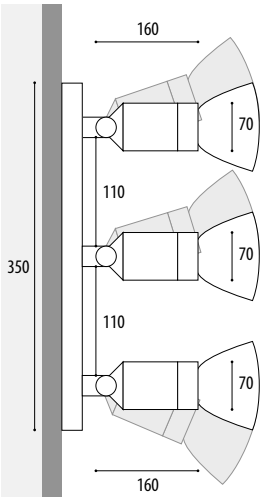

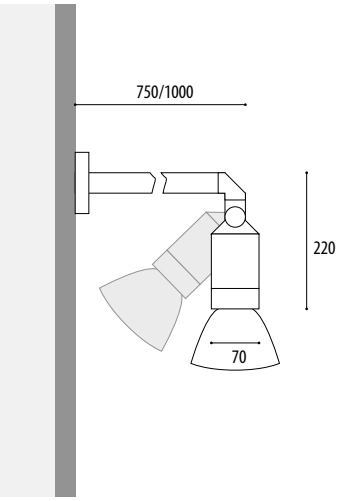

Article number	Lamps	Wattage	V/mA	Socket	Radation angle
WITH ONE HOLDER FOR WALL AND CEILING INSTALLATION, AVAILABLE IN BLACK AND WHITE					
6.0150.01.84 black	PAR38	120W	230V	E27	30°
6.0150.02.84 white	PAR38	80W	230V	E27	30°
WALL BARS WITH 2 HOLDERS, FOR WALL OR CEILING INSTALLATION, AVAILABLE IN BLACK AND WHITE					
6.0158.01.84 black	PAR38	120W	230V	E27	30°
6.0158.02.84 white	PAR38	80W	230V	E27	30°
WALL BARS WITH 3 HOLDERS, FOR WALL OR CEILING INSTALLATION, AVAILABLE IN BLACK					
6.0164.01.84 black	PAR38	120W	230V	E27	30°
ONE HOLDER, LENGTH 750 MM, AVAILABLE IN BLACK AND WHITE					
6.1500.01.84 black	PAR38	120W	230V	E27	30°
6.1500.02.84 white	PAR38	80W	230V	E27	30°
ONE HOLDER, LENGTH 1000 MM, AVAILABLE IN BLACK AND WHITE					
6.1600.01.84 black	PAR38	120W	230V	E27	30°
6.1600.02.84 white	PAR38	80W	230V	E27	30°

OUTDOOR-FLOODLIGHT

IP54 ALU EXCL. CABLE EXCL. CE

· Protection system IP54
· Made of nonrusting anodised aluminium for halogen lamps
· Highly polished aluminium reflector
· Fold-up front frame with safety glass pane and silicon sealing ring
· Supplied without light source

6.1505 (500 W)

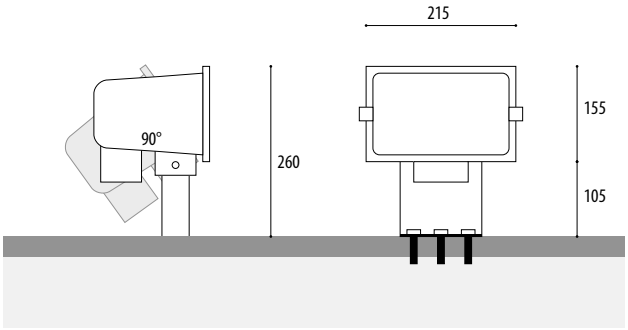

6.1510 (1000 W)
6.1515 (1500 W)

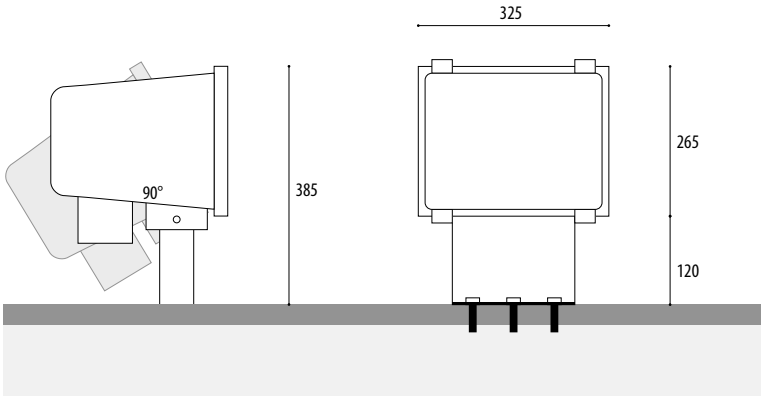

Article number	Lamps	Wattage	V/mA	Socket	Light-current
BODY COLOUR BLACK					
6.1505.01.86	QT-DE12	500W	230V	R7s	9.500lm
6.1510.01.86	QT-DE12	1000W	230V	R7s	22.000lm
6.1515.01.86	QT-DE12	1500W	230V	R7s	36.000lm
BODY COLOUR WHITE					
6.1505.02.86	QT-DE12	500W	230V	R7s	9.500lm

FLUORESCENT-LIGHTS, Ø50

IP67 | CE | INCL | LED OPTIONAL | 230 V | IK10

· Protection system IP67
· Made of impact-resistant and highly transparent PC plastic with a diameter of 50 mm
· For use inside and outside
· Mounted on a non-twisting aluminium mounting system
· With integral ballast or converter
· Supplied with plastic fastening elements and light source

OPTIONS

STAINLESS STEEL V4A 1.4571 316Ti — marine grade 316L stainless steel fixing elements available on request

! — Available with through wiring

Article number	Lamps	Wattage	V/mA	Socket	Light-current	Dimensions A-B-C
4.1200.15.00	T8	15 W	230 V	G5	950 lm	967 mm
4.1200.18.00	T8	18 W	230 V	G5	1350 lm	1119 mm
4.1200.30.00	T8	30 W	230 V	G5	2400 lm	1424 mm
4.1200.36.00	T8	36 W	230 V	G5	3350 lm	1729 mm
4.1200.58.00	T8	58 W	230 V	G5	5200 lm	2029 mm
4.1300.14.00	T5	FH 14 W	230 V	G5	1200 lm	719 mm
4.1300.21.00	T5	FH 21 W	230 V	G5	1900 lm	1019 mm
4.1300.28.00	T5	FH 28 W	230 V	G5	2600 lm	1319 mm
4.1300.35.00	T5	FH 35 W	230 V	G5	3300 lm	1619 mm
4.1400.49.00	T5	FQ 49 W	230 V	G5	4300 lm	1619 mm
4.1400.54.00	T5	FQ 54 W	230 V	G5	4450 lm	1319 mm
4.1400.80.00	T5	FQ 80 W	230 V	G5	6150 lm	2049 mm

LED-VERSIONS ON REQUEST

ACCESSORIES

PAGES 234-251

1 POW-LED 350 mA
1 POW-LED 700 mA

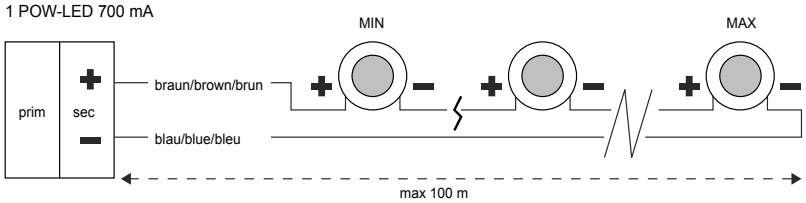

3 POW-LED 350 mA
3 POW-LED 700 mA

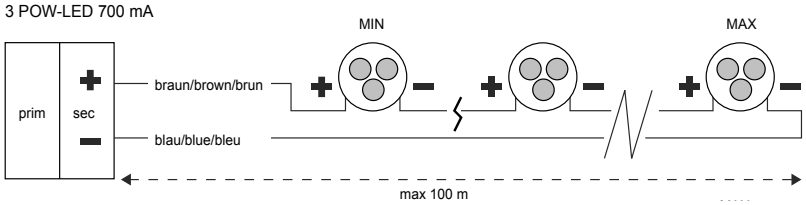

WIRING DIAGRAM-EXAMPLE FOR
5.0635.00.01
5.0635.65.03
5.0635.65.10
5.0635.65.20
5.0635.00.21

5.0670.65.10
5.0670.65.20
5.0670.00.21
5.0670.00.30

Attention: Serial connection with POW-LED modules!

MIN/MAX QUANTITY!

12 POW-LED 350 mA

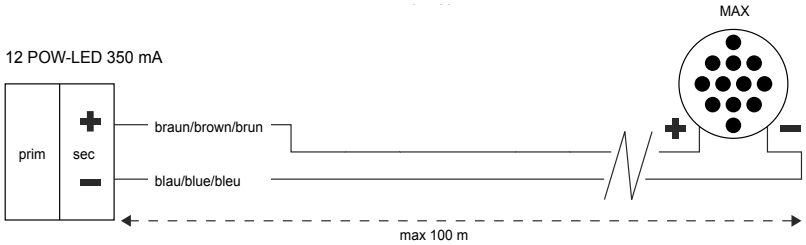

WIRING DIAGRAM-EXAMPLE FOR
5.0635.65.20
5.0635.00.21

Attention: Serial connection with POW-LED modules!

MIN/MAX QUANTITY!

1 x 36 POW LED 350 mA

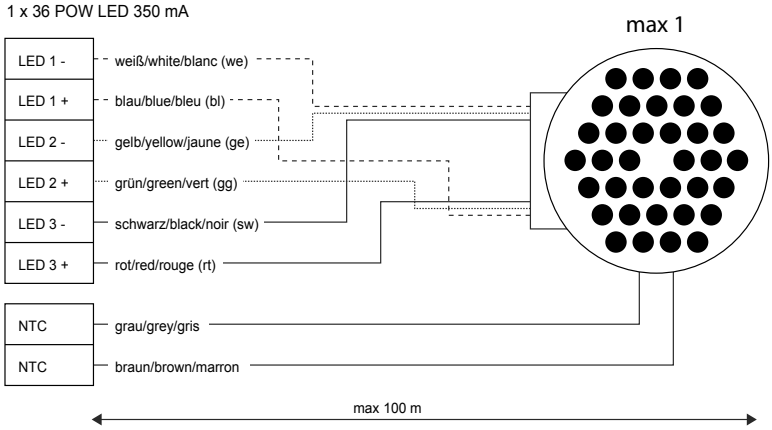

WIRING DIAGRAM-EXAMPLE FOR
5.0635.00.36

Attention: Serial connection with POW-LED modules!

MIN/MAX QUANTITY!

3 x 12 POW LED 350 mA

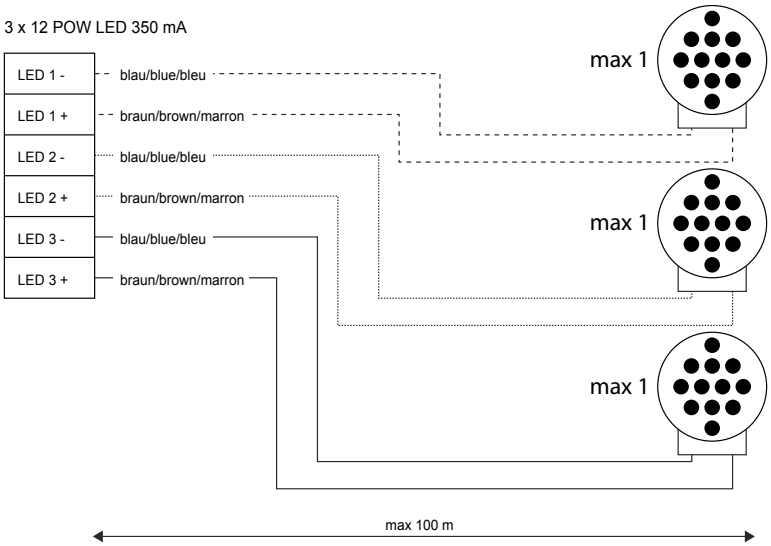

CONSTANT CURRENT POWER SUPPLIES

· Constant current converter 350mA/700mA for POW LED modules
· Constant current converter 12 V-DC for POW LED modules
· Controlled constant output current 350mA/700mA; +- 5%
· SELV
· Over temperature and short circuit protection
· overload and overvoltageprotection
· Identification of polarity: +/-
· POW LED modules must be wired in series connection to the constant current power supplies, parallel connection at 12 V-DC
· Normen: Safety: EN 61347 Radio Interferencies: EN 55015 Harmonics: EN 61000-3-2 Immunity: EN 61547

Power supply with DALI for various spotlights available on request:
5.0690.03.30
150-1400mA (factory-made setting)
DALI, 2-55V, 30W max, IP20
Exact configuration requires prior agreement!

Article number		5.0635.00.01	5.0635.65.03	5.0635.65.10	5.0635.65.20	5.0635.00.21	5.0635.00.36
Primary voltage	V AC	10-264	95-240	95-240	220-240	220-240	90-254
Frequency	Hz	50-60	50-60	50-60	50-60	50-60	50-60
Output Current	mA	350	350	350	350	350	350
output power	W	1,4	1-4,2	3-12	5-17	15	5-17 (each channel)
secondary voltage	V DC	Max. 4,0	Max. 16,0	Max 34,0	Max. 48,0	2–45,0	Max. 48,0
Ambient temperature ta	°C	Max. 50°	Max. 60°	Max. 40°	Max. 40°	Max. 40°	Max. 45°
Max. case temperature tc	°C	90°	80°	75°	90°	75°	-
Dimensions	mm	35,5x32x25	52x30x23	115x34x19	123x38x21	103x67x24	254x180x54
Weight	kg	0,1	0,05	0,1	0,15	0,13	1,8
IP65 Protection housing on request		-	✔	✔	✔	✔	-
certification		CE	CE, CSV	CE	CE, CSV	CE	CE
dimming		-	-	-	-	Taster/Push or 1…10Vdc	-
IP protection		IP65	IP65	IP65	IP65	IP20	IP65
connection matrix							
Modul 1 POW LED 350mA		1	1-3	3-6	5-12	1-12	18-36 (6-12 each channel)
Modul 3 POW LED 350mA		-	1	1-2	2-4	1-4	6-12 (2-4 each channel)
Modul 12 POW LED 350mA		-	-	-	1	1	1-3
Modul 36 POW LED 350mA		-	-	-	-	-	1
Modul 3 POW LED 700mA		-	-	-	-	-	-

Article number		5.0670.65.10	5.0670.65.20	5.0670.00.21	5.0670.00.30
		700 mA			
Primary voltage	V AC	95-240	95-240	220-240	100-264
Frequency	Hz	50-60	50-60	50-60	50-60
Output Current	mA	700	700	700	700
output power	W	3-10	5-17	35	30
secondary voltage	V DC	Max. 18,0	Max. 24,0	2–50,0	Max 48,0
Ambient temperature ta	°C	Max. 40°	Max. 40°	Max. 40°	Max. 50°
Max. case temperature tc	°C	75°	90°	75°	90°
Dimensions	mm	115x34x19	123x38x21	103x67x24	133x40x31
Weight	kg	0,1	0,15	0,13	0,25
IP65 Protection housing on request		✔	✔	✔	-
certification		CE	CE	CE	CE
dimming		-	-	Taster/Push or 1…10Vdc	-
IP protection		IP65	IP65	IP20	IP65
connection matrix					
Modul 1 POW LED 350mA		-	-	-	-
Modul 3 POW LED 350mA		-	-	-	-
Modul 12 POW LED 350mA		-	-	-	-
Modul 36 POW LED 350mA		-	-	-	-
Modul 3 POW LED 700mA		1	2	1-3	2-4

WIRING DIAGRAM-EXAMPLE

REMARKS
Min/Max numbers of POW-LED Modules must be considered!

Modul 36 POW-LED RGB 350 mA

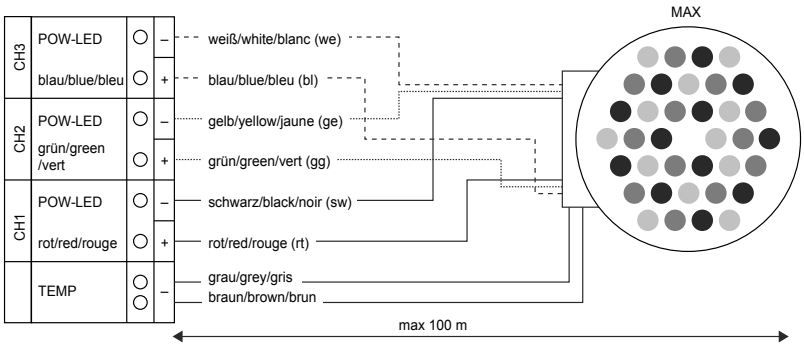

Modul 3 POW-LED RGB 350 mA
Modul 3 POW-LED RGB 700 mA

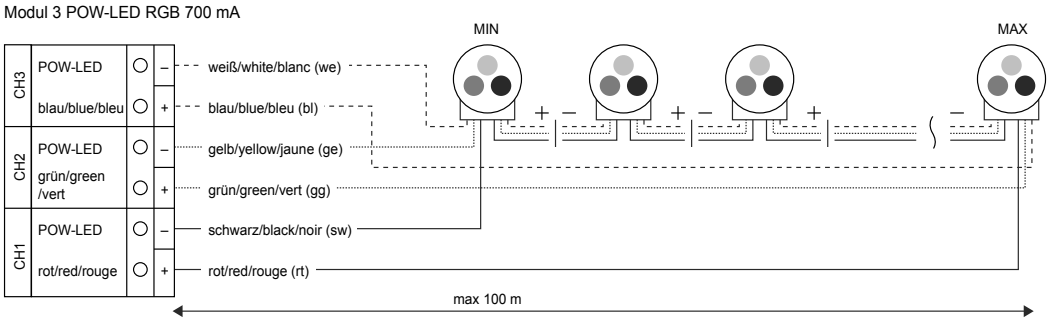

Modul 12 POW-LED RGB 350 mA
Modul 12 POW-LED RGB 700 mA

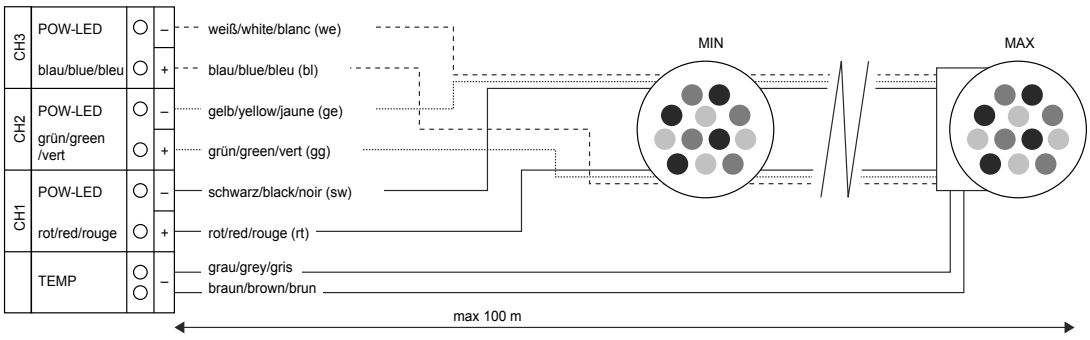

Modul 1 POW-LED RGB Multichip 350 mA

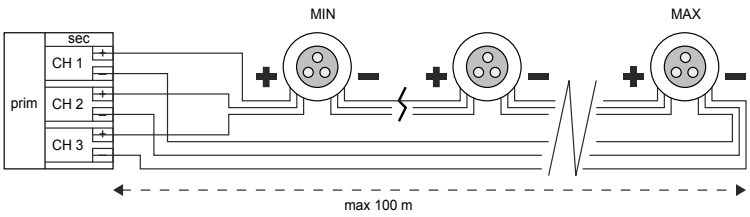

RGB-CONTROLLER

· 350mA/700mA-RGB-Controler for connection of POW-LED RGB Modules
· 3 full addressable constant current output channels
· different stand alone programs and colour sequences (red/green/blue/cyan/pink/yellow/white/3 Colour Change/all on)
· DMX512 interface in/out
· Master/slave for synchronization of several controllers
· Temperature control (NTC)
· optional remote control 5.0690.09.55 for changing programs and regulating the speed of colour changer

RGB-W-CONTROLLER

· 350mA/700mA 12V DC-RGB(W)-Controler for connection of POW LED RGBW Modules
· 4 full addressable constant current output channels
· different stand alone programs and colour sequences (red/green/blue/cyan/pink/yellow/white/3 Colour Change/all on)
· DMX512 interface in/out
· Master/slave for synchronization of several controllers
· Temperature control (NTC)
· optional remote control 5.0690.09.55 for changing programs and regulating the speed of colour changer)

Article number		5.0635.09.16	5.0635.09.24	5.0635.09.50	5.0670.09.18	5.0635.09.52	NEW 5.0635.19.52	5.0670.09.52	NEW 5.0670.19.52
		350 mA			700 mA	350 mA		700 mA/12 V-DC	
Primary voltage	V AC	90-254	90-254	90-254	90-254	90-254	120-250	90–295	120-250
Frequency	Hz	50-60	50-60	50-60	50-60	50-60	50-60	47–63	50-60
Output Current	mA	350	350	350	700	350	350	700	700
output power	W	1-12W	10-40	10-55	10-55	12-70	Max. 50	1-150	Max. 50
efficiency	%	82	82	82	82	82	89	91	89
secondary voltage	V DC	Max. 15,0	Max 24,0	Max. 48,0	Max. 24,0	Max. 48,0	2-55	12	2-55
Ambient temperature ta	°C	Max. 45°	Max. 45°	Max. 45°	Max. 45°	Max. 45°	Max 50°	-10° - +30°C	Max 50°
Dimensions LxWxH	mm	254x180x120	254x180x120	254x180x120	254x180x120	254x180x120	254x180x111	243x82x101	254x180x111
Weight	kg	1,6	1,8	1,8	1,7	1,8	0,6	1,2	0,6
IP protection		IP65	IP65	IP65	IP65	IP20	IP65	IP20	IP65
H-rail mounting						✔	-	✔	-
mounting housing IP65						on request	✔ room temperature max. 35°C	9.0670.65.72 room temperature max. 35°C	✔ room temperature max. 35°C
DMX512 in/out		✔	✔	✔	✔	✔	✔	✔	✔
Stand-alone-Programmes		✔	✔	✔	✔	✔	-	✔	-
Master/Slave Synchronisation		✔	✔	✔	✔	✔	✔	✔	✔
dimming		PWM	PWM	PWM	PWM	PWM	HHD	PWM	HHD
Remote control 5.0690.09.55		✔	✔	✔	✔	✔	✔	✔	✔
connection matrix									
Modul 3 POW LED RGB 350mA		1-4	5-8	5-12	-	-	-	-	-
Modul 6 POW LED RGB 350mA		1-2	3-4	3-6	-	-	-	-	-
Modul 12 POW LED RGB 350mA		1	1-2	2-3	-	-	-	-	-
Modul 18 POW LED RGB 350mA		-	1	1-2	-	-	-	-	-
Modul 24 POW LED RGB 350mA		-	1	-	-	-	-	-	-
Modul 27 POW LED RGB 350mA		-	-	1	-	-	-	-	-
Modul 36 POW LED RGB 350mA		-	-	1	-	-	-	-	-
Modul 3 POW LED RGB 700mA		-	-	-	1-6	-	-	-	-
Modul 12 POW LED RGB 700mA		-	-	-	1	-	-	-	-
Modul 18 POW-LED RGB 700mA (4.3061)		-	-	-	1	-	-	-	-
Modul 1 POW LED RGB Multichip 350mA		1-4	5-8	5-12	-	-	-	-	-
Modul 3 POW LED RGB Multichip 700mA		-	-	-	1-2	-	-	-	-
Modul 48 POW LED RGBW 350mA		-	-	-	-	1	-	-	-
Modul 12 Multichip POW LED RGB-W 700mA		-	-	-	-	-	-	1	1
Modul 8 Multichip POW LED RGB-W 700mA		-	-	-	-	-	-	1	1
Modul 6 Multichip POW LED RGB-W 700mA		-	-	-	-	-	-	1-2	1-2
Modul 3 Multichip POW LED RGB-W 700mA		-	-	-	-	-	-	1-4	1-4
Modul 1 Multichip POW LED RGB-W 350mA						1-12	1-12	-	-
Modul 4 Multichip POW LED RGB-W 350mA		-	-	-	-	1-3	1-3	-	-
Modul 1 Multichip POW LED Dyn. White 350mA		-	-	-	-	1-12	1-12	-	-

Article number		5.0670.00.06	5.0670.00.15	5.0670.00.18	5.0630.01.12	5.0630.03.12	5.0630.10.12
Primary voltage	V AC	90-250	90-250	95-240	90-250	90-250	90-250
Frequency	Hz	50-60	50-60	50-60	50-60	50-60	50-60
Output Current	mA	1400	3500	700	3600	3600	3600
output power	W	33,6	55	50	50	50-120	60
efficiency	%	80	80	80	82	82	95
secondary voltage	V DC	9-24	12	24	12-15	12-15	12
Ambient temperature ta	°C	Max. 45°	Max. 45°	Max. 45°	Max 50°	Max 50°	Max 35°
Dimensions LxWxH	mm	180x90x90	180x180x90	180x180x90	192x72x71	243x82x71	254x180x111
Weight	kg	0,5	0,8	1,0	0,5	0,8	0,5
IP protection		IP65	IP65	IP65	IP20	IP20	IP65
H-rail mounting		-	-	-	✔	✔	-
Mounting housing IP65 254x180x111mm			-	-	9.0630.65.12 room temperature max. 35°C	-	✔ room temperature max. 35°C
DMX512 in/out							
Stand-alone-Programmes							
Master/Slave Synchronisation							
dimming			1…10V		1…10V/Dali	1…10V/Dali	
Remote control 5.0690.09.55							
connection matrix							
Only for Modul 4 POW LED, Serie 4.0100.30, 4.0102		1	-	-	-	-	-
Only for Modul 6 POW LED, Serie 4.0171		1	-	-	-	-	-
Only for Modul 15 POW LED, Serie 4.0199		-	1	-	-	-	-
Only for Modul 18 POW LED, Serie 4.3061		-	-	1	-	-	-
Only for Modul 12 POW LED, Serie 4.0292/4.0291		-	-	-	1	1-3	1
Only for Modul 8 POW LED, Serie 4.0202		-	-	-	-	-	-
Only for Modul 18 POW LED, Serie 4.0271/4.0273/4.0275		-	-	-	-	-	-
Only for Modul 27 POW LED, Serie 4.0271/4.0273/4.0275		-	-	-	-	-	-
Only for Modul 48 POW LED, Serie 4.1900		-	-	-	-	-	-
Only for Modul 4 Multichip POW LED RGB-W, Serie 4.0100.00		-	-	-	-	-	-
Only for Modul 12 Multichip POW LED RGB-W, Serie 4.0292/4.0291		-	-	-	-	-	-
Only for Modul 27 POW LED RGB, Serie 4.0271/4.0273/4.0275		-	-	-	-	-	-
Only for Modul 9 Multichip POW LED RGB, Serie 4.0199		-	-	-	-	-	-

SPECIAL POWER SUPPLIES

· Constant current converter 350mA/700mA for POW LED modules
· Controlled constant output current 350mA/700mA; +- 5%
· SELV
· Over temperature and short circuit protection
· Overload and overvoltageprotection
· Identification of polarity: +/-
· POW LED modules must be wired in series connection to the constant current power supplies
· Normen: Safety: EN 61347 Radio Interferencies: EN 55015 Harmonics: EN 61000-3-2 Immunity: EN 61547

SPECIAL CONTROLLERS

· 700mA/12V DC-RGB(W)-Controler for connection of POW LED RGB(W) Modules
· 3/4 full addressable constant current output channels
· different stand alone programs and colour sequences (red/green/blue/cyan/pink/yellow/white/ 3 Colour Change/all on)
· DMX512 interface in/out
· Master/slave for synchronization of several controllers
· Temperature control (NTC)
· optional remote control 5.0690.09.55 for changing programs and regulating the speed of colour changer

	NEW	NEW						NEW
5.0630.10.08	**5.0630.10.04**	**5.0630.00.04**	**5.0670.00.40**	**5.0670.11.24**	**5.0635.00.48**	**5.0670.19.24**	**5.0630.09.52**	**5.0620.19.52**
90-250	90-305	90-305	90-250	90-250	90-250	230 +/-10%	90-250	120-250
50-60	50-60	50-60	50-60	50-60	50-60	50-60	50-60	50-60
2800	1200	1200	-	700	350	700	2100	200
40	Max. 25	Max. 25	60	85	50	Max. 85	120	Max. 50
95	85	85	82	82	82	82	82	89
12	12	12	24	12	48	Max. 12	12-15	2-55
Max 35°	Max 50°	Max 50°	Max. 45°	Max. 45°	Max. 45°	Max. 45°	Max 50°	Max 50°
254x180x111	254x180x111	148x40x32	254x180x90	254x180x90	254x180x90	254x180x90	243x82x71	254x180x111
0,4	0,6	0,3	2,0	2,5	2,5	2,5	0,8	0,6
IP65	IP65	IP65	IP65	IP65	IP20	IP65	IP20	IP65
-	-	-	-	-	-	-	✔	-
✔ room temperature max. 35°C	✔ room temperature max. 35°C	-	-	-	on request		9.0630.65.12 room temperature max. 35°C	✔ room temperature max. 35°C
						✔	✔	✔
						✔	✔	-
						✔	✔	✔
						PWM	PWM	HHD
						✔	✔	✔
-	1	1	-	-	-	-	-	-
-	-	-	-	-	-	-	-	-
-	-	-	-	-	-	-	-	-
-	-	-	-	-	-	-	-	-
-	-	-	-	-	-	-	-	-
1	-	-	-	-	-	-	-	-
-	-	-	1	-	-	-	-	-
-	-	-	-	1	-	-	-	-
-	-	-	-	-	1		-	-
-	-	-	-	-	-	-	-	1-3
-	-	-	-	-	-	-	1	-
-	-	-	-	-	-	1	-	-
-	-	-	-	-	-	1	-	-

CONSTANT VOLTAGE POWER SUPPLIES

· Constant voltage converter 12 V-DC for POW LED modules
· SELV
· Over temperature and short circuit protection
· overload and overvoltageprotection
· Identification of polarity: +/-
· POW LED modules must be wired in parallel connection to the power supplies

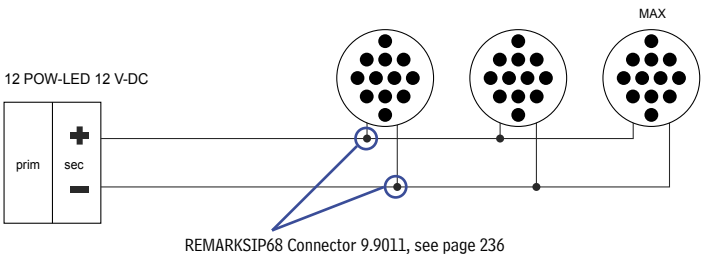

WIRING DIAGRAM-EXAMPLE FOR
5.0600.65.60
5.0600.65.15

Attention: Parallel connection with POW-LED modules!

MIN/MAX QUANTITY!

Article number		5.0600.65.20	5.0600.65.60	5.0600.65.15
Primary voltage	V AC	90-295	90-295	90-295
Frequency	Hz	50-60	50-60	50-60
Output Current	mA	0-1670	0-5000	5500-11000
output power	W	20	60	150
secondary voltage	V DC	Max 12,0	Max 12,0	Max 12,0
Ambient temperature ta	°C	Max 70°	Max 60°	Max 60°
Max. case temperature tc	°C	80°	75°	75°
Dimensions	mm	120x35x27	195x62x39	223x68x39
Weight	kg	0,5	0,8	1,0
certification		CE	CE	CE
dimming		with dimming module 5.0690.03.15	with dimming module 5.0690.03.15	with dimming module 5.0690.03.15
IP protection		IP65	IP65	IP65
connection matrix				
Modul 9 POW LED 12 V-DC (4.0240)		1	1-3	1-6
Modul 12 POW LED 12 V-DC		1-3	1-3	1-9
Modul 36 POW LED 12 V-DC		1	1	1-3

SAFETY TRANSFORMERS

· The standard supply units for the operation of underwater lights are moulded safety transformers with separate windings, designed to comply with protection system IP65 and contamination class P2.

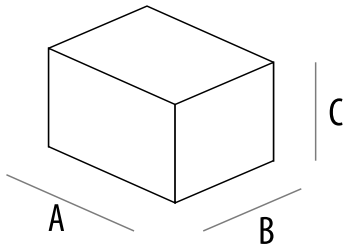

Article number	Wattage		Connection	Dimensions	Protection system	Weight	Cable
5.0098.00.00	50 VA	1 x 50 W	12V-AC	(A) 170 x (B) 130 x (C) 80	IP65	2,4 kg	with cable
5.0100.00.00	100 VA	2 x 50 W	12 V-AC	(A) 170 x (B) 130 x (C) 80	IP65	3,2 kg	with cable
5.0101.00.00	150 VA	2 x 75 W	12 V-AC	(A) 185 x (B) 130 x (C) 90	IP65	3,6 kg	with cable
5.0311.00.00	200 VA	2 x 100 W	12 V-AC	(A) 185 x (B) 130 x (C) 105	IP65	4,0 kg	with cable
5.0103.00.00	350 VA	2 x 175 W	12 V-AC	(A) 215 x (B) 170 x (C) 110	IP65	6,7 kg	without cable
5.0107.00.00	600 VA	2 x 300 W	12 V-AC	(A) 230 x (B) 220 x (C) 120	IP65	12,0 kg	without cable
5.0109.00.00	900 VA	3 x 300 W	12 V-AC	(A) 335 x (B) 220 x (C) 145	IP65	18,2 kg	without cable
5.0411.00.00	200 VA	1 x 200 W	12/13/14 V-AC	(A) 185 x (B) 130 x (C) 105	IP65	4,0 kg	without cable
5.0421.00.00	400 VA	2 x 200 W	12/13/14 V-AC	(A) 215 x (B) 170 x (C) 110	IP65	8,5 kg	without cable
5.0310.00.01	150 VA	1 x 150 W	24 V-DC	(A) 220 x (B) 175 x (C) 115	IP65	6,8 kg	without cable
5.0312.00.01	250 VA	1 x 250 W	24 V-DC	(A) 220 x (B) 175 x (C) 115	IP65	7,8 kg	without cable
5.0313.00.01	600 VA	4 x 150 W	24 V-DC	(A) 270 x (B) 255 x (C) 145	IP65	16,9 kg	without cable
5.0314.00.01	400 VA	2 x 200 W	24 V-DC	(A) 270 x (B) 255 x (C) 145	IP65	17,1 kg	without cable
5.0106.00.01	600 VA	1 x 600 W	28 V-DC	(A) 330 x (B) 215 x (C) 140	IP65	17,1 kg	without cable
5.0410.00.01	200 VA	1 x 200 W	30 V-DC	(A) 220 x (B) 175 x (C) 120	IP65	4,4 kg	without cable
5.0420.00.01	400 VA	2 x 200 W	30 V-DC	(A) 310 x (B) 215 x (C) 120	IP65	7,6 kg	without cable

REMOTE CONTROL

FOR COLOURED LIGHT CONTROL OF RGB- AND RGBW-LIGHTS.

· radio remote control for WIBRE controller
· controlling of RGB and RGB-W lights
· 34 preconfigured programs
· 28 fixed colours with adjustable brightness
· 6 colour changes with adjustable speed
· Program selection and setting via 434 MHz handheld transmitter
· 3-digit 7-segment display
· DMX output
· Firmware update via USB
· Radio receiver at 434 MHz
· 2 buttons for selection of the programs
· 2 buttons for setting of brightness and velocity
· digital program display on the receiver
· contents: remote control and receiver

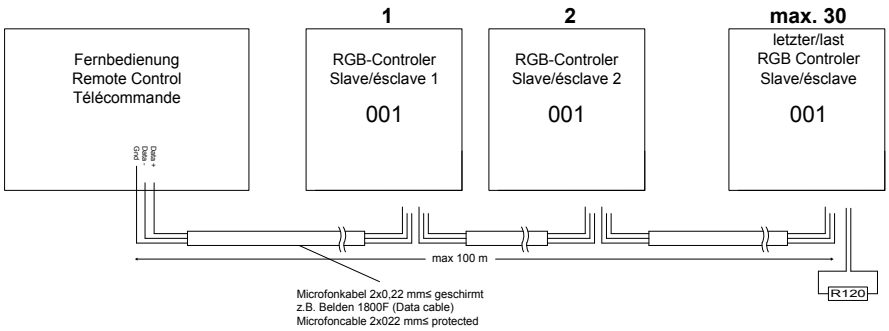

WIRING DIAGRAM-EXAMPLE

MIN/MAX QUANTITY!

Article number	Control output	Dimensions	Weight	Operating temperature
5.0690.09.55	DMX512	160 x 80 x 60 mm (Receiver) 80 x 50 x 17 mm (Transmitter)	0,3 kg	0 - +40°C

USB-DMX CONTROLLER

FOR EASY PROGRAMMING AND SAVING OF LIGHT SCENES.

USB DMX Controller for easy programming and saving of light scenes and programs via PC on mini SD memory card. A use, as a Stand-Alone solution, without PC connection is possible with a power supply included in the delivery.
Via integral up/down buttons with a display or a potential-free switch key on I/O ports a selection of 8 memorized light scenes is possible.
Content: USB-DMX-Controller, USB-Kabel, Netzteil, SD-Karte, CD mit Manual, Stand-Alone Software und Gerätetreibern (Windows 98; ME, 2000, XP, Vista)

ADDITIONAL PARTS

Switch key connection box: Plastic material, IP 65, for the connection of 8 potential-free switch keys, USB DMX controller and recall of 8 programmed light scenes in port mode.
5.0690.09.02

Article number	Control output	DMX-Connection	PC-Connection	External Ports	Internal Clock	Dimensions	Weight	Operating temperature
5.0690.09.01	2 x DMX512	XLR-Stecker 3-polig	USB	8 I/O Ports	Realtime Clock	80 x 90 x 40 mm	0,1 kg	0 - +45°C

STAND-ALONE-CONTROLLER

UP TO DATE STAND-ALONE-DMX-CONTROLER WITH AN HIGHLY SENSITIVE SURFACE (TOUCHWHEEL). FOR AN EXTENSIVE CONTROL OF RGB-LIGHTS.

- Standalone DMX controller and user interface
- 512 channels DMX output (RGB)
- 4 mode keys to select intensity, color, white and memory mode.
- On/off key and a play/pause key
- Color chase on up to 12 RGB fixtures/light-points with spread effect
- 4 user-defined memory slots
- 5 status LEDs
- Touch wheel with 12 RGB LEDs
- Glass finish white
- Ultra thin design
- Wall mountable

Article number	Control output	Dimensions	Weight	Operating temperature
5.0690.09.15	DMX512	160 x 80 x 11 mm	0,3 kg	0 - +40°C

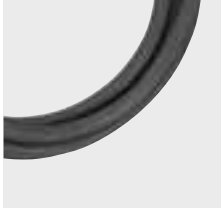
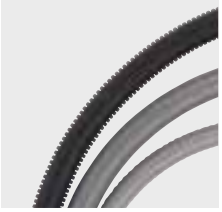

CABLE

Article number	Unit	cable cross section	Outer diameter
SILICON CABLE			
9.6250.02.05	pro m	2 x 0,5 qmm	ø 5,8 mm
9.6250.02.15	pro m	2 x 1,5 qmm	ø 7,0 mm
9.6250.02.25	pro m	2 x 2,5 qmm	ø 8,0 mm
9.6250.02.40	pro m	2 x 4,0 qmm	ø 11,0 mm
9.6250.02.60	pro m	2 x 6,0 qmm	ø 12,0 mm
9.6250.06.05	pro m	6 x 0,5 qmm	ø 8,3 mm
9.6250.16.05	pro m	6 x 0,5 qmm	ø 5,5 mm
9.6250.08.05	pro m	8 x 0,5 qmm	ø 9,0 mm
9.6250.03.15	pro m	3G 1,5 qmm	ø 7,5 mm
9.6250.03.25	pro m	3G 2,5 qmm	ø 10,0 mm
9.6250.05.15	pro m	5G 1,5 qmm	ø 11,0 mm

Article number	Unit	cable cross section	Outer diameter
SPECIAL UNDERWATER CABLE			
9.6150.02.05	pro m	2 x 0,5 qmm	ø 5,5 mm
9.6150.02.10	pro m	2 x 1,0 qmm	ø 6,1 mm
9.6150.02.15	pro m	2 x 1,5 qmm	ø 8,0 mm
9.6150.02.25	pro m	2 x 2,5 qmm	ø 8,0 mm
9.6150.25.10	pro m	2 x 2,5 + 1 x 1,0 qmm	ø 8,3 mm
9.6150.25.40	pro m	2 x 2,5 + 4 x 0,5 qmm	ø 9,5 mm
9.6150.02.40	pro m	2 x 4 qmm	ø 9,7 mm
9.6150.02.60	pro m	2 x 6 qmm	ø 10,9 mm
9.6150.03.15	pro m	3 x 1,5 qmm	ø 7,5 mm
9.6150.23.25	pro m	3 x 2,5 qmm (robust)	ø 10,5 mm
9.6150.04.41	pro m	1 x 4 qmm + 4 x 1,0 + 2 x 0,25 qmm	ø 10,7 mm
9.6150.04.10	pro m	2 x 4 qmm + 1 x 1,0 qmm	ø 9,7 mm
9.6150.06.05	pro m	6 x 0,5 qmm	ø 7,1 mm
9.6150.08.05	pro m	8 x 0,5 qmm	ø 7,9 mm
9.6150.06.10	pro m	6 x 1,0 qmm + 2 x 0,5 qmm	ø 10,4 mm
9.6150.10.02	pro m	10 x 0,25 qmm	ø 8,0 mm
9.6150.10.05	pro m	10 x 0,5 qmm	ø 10 mm

CABLE PROTECTION TUBE

Article number	Unit		Outer diameter	Inner diameter	
CABLE PROTECTION TUBE					
9.0068.00.00	pro m	flexible fluted	ø 28,1 mm	ø 21,9 mm	for Type 4.0274
9.6300.00.00	pro m	flexible	ø 25 mm	ø 20 mm	for Type 4.0084, 4.0094, 4.0089, 4.0012, 4.0199, 4.0171, 4.0292, 4.3061

THREADED JOINT CABLE, TUBE SUPPORT

PG9 CABLE GLAND, BRASS, WITHOUT COUNTER NUT			
9.9004.00.09	ø-Kabel 6,5–4 mm	PG9	IP68
82.3.00146.009	Counter nut brass	PG9	

PG11 CABLE GLAND, BRASS, WITHOUT COUNTER NUT			
9.9004.00.11	ø-Kabel 9,5–6,5 mm	PG11	IP68
9.9004.05.11	ø-Kabel 10,5–7 mm	PG11	IP68

PG11 CABLE GLAND, 316L STAINLESS STEEL, WITHOUT COUNTER NUT			
9.9004.40.11	ø-Kabel 9,5–6,5 mm	PG11	IP68
9.9004.45.11	ø-Kabel 10,5–7 mm	PG11	IP68
87.3.00002.011	Counter nut brass	PG11	

PG13,5 CABLE GLAND, BRASS, WITHOUT COUNTER NUT			
9.9004.00.13	ø-Kabel 10,5–7 mm	PG13,5	IP68
9.9004.05.13	ø-Kabel 9,5–6,5 mm	PG13,5	IP68

PG13,5 CABLE GLAND, 316L STAINLESS STEEL, WITHOUT COUNTER NUT			
9.9004.40.13	ø-Kabel 10,5–7 mm	PG13,5	IP68
9.9004.45.13	ø-Kabel 9,5–6,5 mm	PG13,5	IP68
87.4.00011.213	Counter nut brass	PG13,5	

PG16/21 CABLE GLAND, BRASS, WITHOUT COUNTER NUT			
9.9004.00.16	ø-Kabel 10,5–7 mm	PG16/21	IP68
9.9004.05.16	ø-Kabel 13,5–9 mm	PG16/21	IP68

PG16/21 CABLE GLAND, 316L STAINLESS STEEL, WITHOUT COUNTER NUT			
9.9004.40.16	ø-Kabel 10,5–7 mm	PG16/21	IP68
9.9004.45.16	ø-Kabel 13,5–9 mm	PG16/21	IP68
87.4.00011.000	Counter nut brass	PG16	
87.4.00004.000	Counter nut stainless steel 316 L	PG16	

DK68 CABLE DUCT SUPPORT, 316L STAINLESS STEEL, WITH COUNTER NUT BRASS			
9.9006.40.00	ø-Kabel 11–8 mm	DK68	IP68

DK68 CABLE DUCT SUPPORT, PLASTIC, WITH COUNTER NUT BRASS			
9.9006.41.00	ø-Kabel 11–8 mm	DK68	IP68

IP68 CONNECTORS AND DISTRIBUTERS

Connection and distributor systems for connecting cables and attaching lights for use in outdoor areas IP67 (e.g. soil, gravel) or underwater IP68 (e.g. ponds, fountains, swimming pools).
Caution: Use in water that is heavily-chlorinated or treated with chemicals or brine is restricted and requires consultation.

ELECTRICAL CONNECTION WITH 2-PIN-CABLE

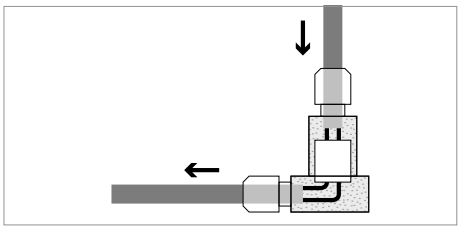

9.9011.02.02

THROUGH WIRING WITH 1 LIGHT

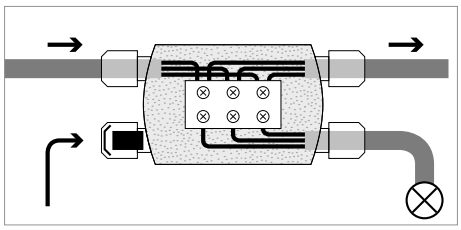

9.9011.03.03

ELECTRICAL CONNECTION WITH MULTI-CORE-CABLES (E.G. RGB LIGHTS)

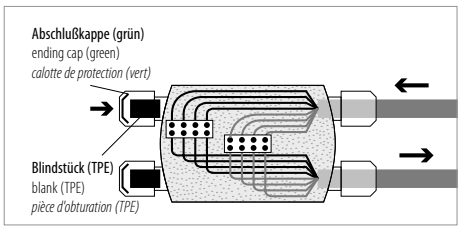

9.9011.03.09

ELECTRICAL CONNECTION WITH 3-PIN-CABLE

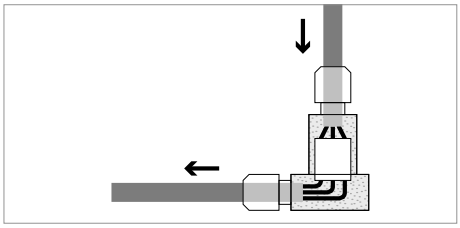

9.9011.02.03

THROUGH WIRING WITH 2 LIGHTS

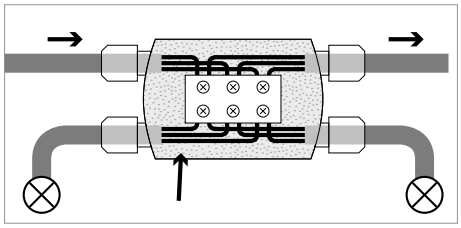

9.9011.04.03

9.9011.02.02	Distributer box	IP68, plastic , 2 entries for cable diameter 5-14mm, with clamp 2poles (max. 4qmm), L73xB67xH30mm
9.9011.02.03	Distributer box	IP68, plastic , 2 entries for cable diameter 5-14mm, with clamp 3poles (max. 4qmm), L73xB67xH30mm
9.9011.03.03	Distributer box	IP68, plastic , 3 entries for cable diameter 5-14mm, with clamp for 3 poles and blank, L108xB65mmxH28mm
9.9011.04.03	Distributer box	IP68, plastic , 4 entries for cable diameter 5-14mm, with clamp for 3 poles and blank, L108xB65mmxH28mm
9.9011.03.09	Distributer box	IP68, plastic , 3 entries for cable diameter 5-14mm, 10 clips (max 1qmm) and blank, L108xB65mmxH28mm
9.9011.00.25	Sealing compound	mixing bag, 170 ml · for 9 small or 3 large distributer

CONNECTION SYSTEMS IP67

Connection systems for outdoor applications

9.9007.00.10	connector – Socket part	ø-cable 6–10 mm	as spare parts	IP67
9.9007.00.14	connector – Socket part	ø-cable 10–14 mm	as spare parts	IP67
9.9007.10.10	connector – Plug part	ø-cable 6–10 mm	as spare parts	IP67
9.9007.10.14	connector – Plug part	ø-cable 10–14 mm	as spare parts	IP67
9.9007.50.00	connector – Distributor block	1 Input, 3 Outputs	as spare parts	IP67
9.9007.60.00	connector – Socket locking part		as spare parts	IP67
9.9007.60.10	connector – Plug locking part		as spare parts	IP67
9.9010.00.16	Cable connection set	PG16	max. cablediameter 3 x 4,0 mm2	IP67
9.9010.68.16	Cable connection set	PG16	with filling compound and special connection clamp, max. cablediameter 3 x 4,0 mm2, ø-Cable 5–14 mm	IP68

BRANCH BOXES 4.0268

· Underwater distribution box made of V4A stainless steel for use in special areas like swimming pools, fountains, damp rooms and containers. The branch box can be used to a maximum depth of 3m and is available in different versions. The numbered models shown are examples for information only. Please make sure that you specify the designated cable diameters on the input and output side with your order so that we can supply you with the correct seal inserts. (IP68-rated protection is only available in conjunction with special underwater cables or silicon cables. In addition, the box needs to be filled with epoxy resin or silicon – please request the filling compound separately.)

4.0268.10.13	stainless steel	1 input PG21, PVDF, ø-Cable 14–18 mm	3 outputs PG16, PVDF, ø-Kabel 9–13,5 mm	IP68/IP67	ø 226 x 95 mm
4.0268.10.15	stainless steel	1 input PG21, PVDF, ø-Cable 14–18 mm	5 outputs PG16, PVDF, ø-Kabel 9–13,5 mm	IP68/IP67	ø 226 x 95 mm
4.0268.10.17	stainless steel	1 input PG21, PVDF, ø-Cable 14–18 mm	7 outputs PG16, PVDF, ø-Kabel 9–13,5 mm	IP68/IP67	ø 226 x 95 mm

· Underwater distribution box, IP68, V2A stainless steel. The branch box can be used to a maximum water depth of 1m and has 6 connections for round cables ranging from 6 to 8mm in diameter. (IP68-rated protection is only available in conjunction with special underwater cables or silicon cables. In addition, the box needs to be filled with epoxy resin or silicon – please request the filling compound separately.)

4.0690.00.00	stainless steel	1 input PG16, PVDF, ø-Cable 9–13,5 mm	6 outputs PG11, PVDF, ø-Cable 7–10,5 mm	IP68/IP67	118 x 118 x 82 mm

BRANCH BOXES ALUMINIUM 4.0069

· This branch box is mounted flush to the ground and comes in cast aluminium for installation on the edge of the pool. After installation the box could be filled with silicon or epoxy resin. Only suitable for use with underwater spotlights.

4.0069.00.00	aluminium	1 input Cable duct support ø 21 mm	2 outputs Pressure gland ø 7–10 mm	IP67	140 x 140 x 88 mm

BRANCH BOXES RED BRONZE 4.0069

· This branch box is mounted flush to the ground and comes in red brass for installation on the edge of the pool. After installation the box could be filled with silicon or epoxy resin. Only suitable for use with underwater spotlights.

4.0069.01.00	bronze	1 input Cable duct support ø 22 mm	2 outputs PG16, brass, ø-Cable 9–13,5 mm	IP67	115 x 115 x 68 mm

BRANCH BOXES STAINLESS STEEL 4.0069

· This branch box is mounted flush to the ground and comes in stainless steel for installation on the edge of the pool. After installation the box is filled with silicon or epoxy resin. Only suitable for use with underwater spotlights.

4.0069.02.00	stainless steel	1 input Cable duct support ø 22 mm	4 outputs (2 x PG 13,5, brass, ø-Cable 14–18 mm 2 x PG 21, brass, ø-Cable 7–9,5 mm)	IP67	140 x 140 x 88 mm

FLANGES FOR WIBRE BUILD-IN POTS

PRESSURE FLANGE – FOR THIN-WALLED POOLS OR POOLS WITH FITTED PLASTIC FOIL

4.0274.00.25	for 4.0274	ø 226 mm, with mounting brackets
4.0292.00.25	for 4.0292	ø 234 mm
4.0299.00.25	for 4.0299	ø 226 mm, without mounting brackets
4.0199.00.25	for 4.0199/4.0202	ø 218 mm
4.0102.00.25	for 4.0102.20	ø 155 mm
4.0102.40.25	for 4.0102.40	155 x 155 mm
4.0052.00.25	for 4.0052	ø 84 mm
4.0171.00.25	for 4.0171	ø 137 mm
4.0012.00.25	for 4.0012	ø 80 mm

ADHESIVE FLANGE – FOR ADHESIVE/FOIL COATING

4.0274.55.55	for 4.0274, 4.0299	ø 360 mm
4.0292.55.55	for 4.0292	ø 350 mm
4.0199.55.55	for 4.0199/4.0202	ø 360 mm
4.0102.55.55	for 4.0102	ø 155 mm
4.0052.55.55	for 4.0052	ø 150 mm
4.0171.55.55	for 4.0171	ø 215 mm
4.0012.55.55	for 4.0012	ø 150 mm

ADHESIVE + PRESSURE FLANGE – FOR ADHESIVE/FOIL COATING WITH PRESSURE FLANGE — DIN-NORM

4.0274.55.25	for 4.0274	ø 360 mm/ø 226 mm
4.0299.55.25	for 4.0299	ø 360 mm/ø 226 mm

MOUNTING PLATES FOR REPLACEMENT TO WIBRE SWIMMINGPOOL LIGHTS

MOUNTING PLATES FOR 4.0271 AND 4.0272

9.8167.00.00	square	V4A	290 x 290 x 11 mm
9.8267.00.00	round	V4A	ø 302 x 9 mm

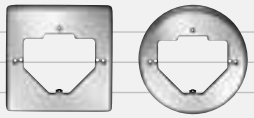

MOUNTING PLATES FOR 4.0291

9.0291.40.00	square	V4A	290 x 290 x 9 mm
9.0291.20.00	round	V4A	ø 302 x 9 mm

MOUNTING PLATE FOR 4.0199

9.0199.20.00	made of V4A stainless steel D300mm with 2 fixationholes (TK270mm), for adaptation to 4.0199 series with already installed housing
9.0299.20.00	round, made of V4A stainless steel D302mm with 2 fixationholes (TK236mm), for adaptation to 4.0299 series with already installed housing
9.0299.40.00	square, made of V4A stainless steel 290 x 290 mm with 2 fixationholes (TK236mm), for adaptation to 4.0299 series with already installed housing

MOUNTING ACCESSORIES

FASTENING SET

9.9268.50.10	V4A stainless steel fastening set for retrofit conversion of Spotlight 4.0267 for Underwater Loudspeaker 4.0014.

ADAPTOR RING

9.9268.50.20	V4A stainless steel ring used to correct wrong installation of the Underwater Loudspeaker Pot 4.0013.

FASTENING METAL PLATE

9.9268.50.30	V4A stainless steel fixing plates for the cover of Spotlight 4.0267/270 to replace a defective fixing loop.

WALL DUCT TUBE

9.9700.00.50	V4A stainless steel wall conduit for Built-in Pot 4.0268, used if it is no longer possible to change the cable.	> 500 mm
9.9700.00.10		> 1000 mm
9.9700.00.15		> 1500 mm

TOOL KIT FOR 4.0271

4.0271.00.20	Set of tools for changing the light source on Light 4.0271, comprising: special spanner SW30 V4A, 1.5mm Allen key and socket key SW10.

WIBRE LIGHTING ELEMENTS

Article number	Lamps	Wattage	Socket		Version	Lumen	Light colour
QT12							
7.2325.00.00	QT12	100W		12V	klar	2.200lm	3.000K
QT16							
7.2217.00.00	QT16	175W		12V	klar	5.100lm	3.000K
7.0218.00.00	QT16	200W		24V	klar	5.800lm	3.050°k
7.0217.00.00	QT16	200W		30V	klar	5.800lm	3.000K
7.0417.00.00	QT16	400W		30V	klar	11.600lm	3.000K
9.2217.00.00	QT16 - SET	175 W		12V			
9.0218.00.00	QT16 - SET	200 W		24V			
9.0217.00.00	QT16 - SET	200 W		30V			
9.0417.00.00	QT16 - SET	400 W		30V			
PAR38 KL							
7.0009.00.00	PAR38 flood	100W	Klemme	12V			
7.0014.00.00	PAR38 spot	120W	Klemme	24V			
7.0015.00.00	PAR38 spot	120W	Klemme	230V			
7.0016.00.00	PAR38 flood	120W	Klemme	230V			

4.0003.01.00 … 141
4.0003.01.00 … 145
4.0003.01.00 … 147
4.0003.01.00 … 147
4.0003.01.00 … 147
4.0003.01.00 … 187
4.0003.01.00 … 191
4.0003.01.01 … 137
4.0003.01.01 … 179
4.0003.01.01 … 183
4.0003.02.00 … 145
4.0003.02.00 … 147
4.0003.02.00 … 147
4.0003.02.00 … 147
4.0003.02.00 … 187
4.0003.02.01 … 133
4.0003.02.01 … 137
4.0003.30.12 … 215
4.0003.30.30 … 203
4.0003.30.60 … 207
4.0003.30.90 … 211
4.0004.00.11 … 175
4.0004.00.13 … 183
4.0004.00.16 … 187
4.0004.40.16 … 141
4.0004.40.16 … 145
4.0004.40.16 … 153
4.0008.01.00 … 153
4.0008.01.00 … 195
4.0008.01.00 … 197
4.0009.00.20 … 141
4.0009.00.20 … 145
4.0009.00.40 … 141
4.0009.00.40 … 145
4.0010.10.01 … 160
4.0010.10.02 … 160
4.0010.10.03 … 160
4.0010.10.04 … 160
4.0010.10.05 … 160
4.0010.10.06 … 160
4.0010.10.07 … 160
4.0010.20.01 … 160
4.0010.20.02 … 160
4.0010.20.03 … 160
4.0010.20.04 … 160
4.0010.20.05 … 160
4.0010.20.06 … 160
4.0010.20.07 … 160
4.0010.40.01 … 160
4.0010.40.02 … 160
4.0010.40.03 … 160
4.0010.40.04 … 160
4.0010.40.05 … 160
4.0010.40.06 … 160
4.0010.40.07 … 160
4.0011.10.01 … 160
4.0011.10.02 … 160
4.0011.10.03 … 160
4.0011.10.04 … 160
4.0011.10.05 … 160
4.0011.10.06 … 160
4.0011.10.07 … 160
4.0011.15.01 … 120
4.0011.15.02 … 120
4.0011.15.03 … 120
4.0011.15.04 … 120
4.0011.15.05 … 120
4.0011.15.06 … 120
4.0011.15.07 … 120
4.0011.15.09 … 120
4.0011.20.01 … 160
4.0011.20.02 … 160
4.0011.20.03 … 160
4.0011.20.04 … 160
4.0011.20.05 … 160
4.0011.20.06 … 160
4.0011.20.07 … 160
4.0011.40.01 … 160
4.0011.40.02 … 160
4.0011.40.03 … 160
4.0011.40.04 … 160
4.0011.40.05 … 160
4.0011.40.06 … 160
4.0011.40.07 … 160
4.0011.50.00 … 119
4.0012.00.00 … 229
4.0012.00.25 … 250
4.0012.01.00 … 94
4.0012.02.00 … 94
4.0012.03.00 … 94
4.0012.10.00 … 94
4.0012.20.11 … 94
4.0012.20.12 … 94
4.0012.20.13 … 94
4.0012.20.16 … 94
4.0012.20.19 … 94
4.0012.40.11 … 94
4.0012.40.12 … 94
4.0012.40.13 … 94
4.0012.40.16 … 94
4.0012.40.19 … 94
4.0012.55.55 … 250
4.0012.75.00 … 229
4.0013.00.07 … 229
4.0014.00.07 … 228
4.0014.01.07 … 228
4.0014.03.07 … 228
4.0016.00.00 … 228
4.0017.00.00 … 228
4.0018.00.00 … 229
4.0018.00.07 … 229
4.0020.20.01 … 164
4.0020.20.02 … 164
4.0020.20.03 … 164
4.0020.20.04 … 164
4.0020.20.05 … 164
4.0020.20.06 … 164
4.0020.20.07 … 164
4.0020.40.01 … 164
4.0020.40.02 … 164
4.0020.40.03 … 164
4.0020.40.04 … 164
4.0020.40.05 … 164
4.0020.40.06 … 164
4.0020.40.07 … 164
4.0021.20.01 … 164
4.0021.20.02 … 164
4.0021.20.03 … 164
4.0021.20.04 … 164
4.0021.20.05 … 164
4.0021.20.06 … 164
4.0021.20.07 … 164
4.0021.40.01 … 164
4.0021.40.02 … 164
4.0021.40.03 … 164
4.0021.40.04 … 164
4.0021.40.05 … 164
4.0021.40.06 … 164
4.0021.40.07 … 164
4.0025.20.11 … 168
4.0025.20.12 … 168
4.0025.20.13 … 168
4.0025.20.14 … 168
4.0025.20.15 … 168
4.0025.20.16 … 168
4.0025.20.17 … 168
4.0025.20.19 … 168
4.0025.40.11 … 168
4.0025.40.12 … 168
4.0025.40.13 … 168
4.0025.40.14 … 168
4.0025.40.15 … 168
4.0025.40.16 … 168
4.0025.40.17 … 168
4.0025.40.19 … 168
4.0026.20.01 … 168
4.0026.20.02 … 168
4.0026.20.03 … 168
4.0026.20.04 … 168
4.0026.20.05 … 168
4.0026.20.06 … 168
4.0026.20.07 … 168
4.0026.20.09 … 168
4.0026.20.11 … 168
4.0026.20.12 … 168
4.0026.20.13 … 168
4.0026.20.14 … 168
4.0026.20.15 … 168
4.0026.20.16 … 168
4.0026.20.17 … 168
4.0026.20.19 … 168
4.0026.40.01 … 168
4.0026.40.02 … 168
4.0026.40.03 … 168
4.0026.40.04 … 168
4.0026.40.05 … 168
4.0026.40.06 … 168
4.0026.40.07 … 168
4.0026.40.09 … 168
4.0026.40.11 … 168
4.0026.40.12 … 168
4.0026.40.13 … 168
4.0026.40.14 … 168
4.0026.40.15 … 168
4.0026.40.16 … 168
4.0026.40.17 … 168
4.0026.40.19 … 168
4.0050.30.11 … 42
4.0050.30.12 … 42
4.0050.30.13 … 42
4.0050.30.41 … 42
4.0050.30.42 … 42
4.0050.30.43 … 42
4.0050.30.80 … 42
4.0052.00.25 … 250
4.0052.01.00 … 36
4.0052.02.00 … 36
4.0052.03.00 … 36
4.0052.05.00 … 36
4.0052.20.11 … 36
4.0052.20.12 … 36
4.0052.20.13 … 36
4.0052.20.41 … 36
4.0052.20.42 … 36
4.0052.20.43 … 36
4.0052.20.80 … 36
4.0052.55.55 … 250
4.0060.01.00 … 175
4.0061.04.95 … 175
4.0061.14.01 … 174
4.0061.14.02 … 174
4.0061.14.03 … 174
4.0061.14.04 … 174
4.0061.14.05 … 174
4.0061.14.06 … 174
4.0061.14.07 … 174
4.0061.14.09 … 174
4.0061.14.20 … 174
4.0061.14.35 … 174
4.0061.14.50 … 174
4.0061.14.51 … 174
4.0061.14.95 … 175
4.0061.24.01 … 174
4.0061.24.02 … 174
4.0061.24.03 … 174
4.0061.24.04 … 174
4.0061.24.05 … 174
4.0061.24.06 … 174
4.0061.24.07 … 174
4.0061.24.09 … 174
4.0061.24.20 … 174
4.0061.24.35 … 174
4.0061.24.50 … 174
4.0061.24.51 … 174
4.0061.44.01 … 174
4.0061.44.02 … 174
4.0061.44.03 … 174
4.0061.44.04 … 174
4.0061.44.05 … 174
4.0061.44.06 … 174
4.0061.44.07 … 174
4.0061.44.09 … 174
4.0061.44.20 … 174
4.0061.44.35 … 174
4.0061.44.50 … 174
4.0061.44.51 … 174
4.0066.01.00 … 133
4.0066.01.00 … 137
4.0066.01.00 … 179
4.0066.01.00 … 183
4.0066.02.00 … 179
4.0066.02.00 … 183
4.0069.00.00 … 249
4.0069.01.00 … 249
4.0069.02.00 … 249
4.0071.00.20 … 171
4.0071.00.50 … 97
4.0071.00.50 … 123
4.0071.00.50 … 171
4.0071.01.50 … 97
4.0071.01.50 … 123
4.0071.20.01 … 172
4.0071.20.02 … 172
4.0071.20.03 … 172
4.0071.20.06 … 172
4.0071.20.09 … 172
4.0071.20.11 … 172
4.0071.20.12 … 172
4.0071.20.13 … 172
4.0071.20.16 … 172
4.0071.20.19 … 172
4.0071.20.20 … 172
4.0071.20.35 … 172
4.0071.40.01 … 172
4.0071.40.02 … 172
4.0071.40.03 … 172
4.0071.40.06 … 172
4.0071.40.09 … 172
4.0071.40.11 … 172
4.0071.40.12 … 172
4.0071.40.13 … 172
4.0071.40.16 … 172
4.0071.40.19 … 172
4.0071.40.20 … 172
4.0071.40.35 … 172
4.0072.00.01 … 124
4.0072.00.02 … 124
4.0072.00.03 … 124
4.0072.00.06 … 124
4.0072.00.09 … 124
4.0072.00.11 … 124
4.0072.00.12 … 124
4.0072.00.13 … 124
4.0072.00.16 … 124
4.0072.00.19 … 124
4.0072.00.20 … 124
4.0072.00.35 … 124
4.0072.30.01 … 124
4.0072.30.02 … 124
4.0072.30.03 … 124
4.0072.30.06 … 124
4.0072.30.09 … 124
4.0072.30.11 … 124
4.0072.30.12 … 124
4.0072.30.13 … 124
4.0072.30.16 … 124
4.0072.30.19 … 124
4.0072.30.21 … 124
4.0072.30.22 … 124
4.0072.30.23 … 124
4.0072.30.29 … 124
4.0072.30.31 … 124
4.0072.30.32 … 124
4.0072.30.33 … 124
4.0072.30.39 … 124
4.0072.30.43 … 124
4.0072.30.50 … 124
4.0072.30.80 … 124
4.0080.00.11 … 104
4.0080.00.12 … 104
4.0080.00.13 … 104
4.0080.00.14 … 104
4.0080.00.15 … 104
4.0080.00.16 … 104
4.0080.00.17 … 104
4.0080.00.19 … 104
4.0080.00.20 … 104
4.0080.00.35 … 104
4.0080.00.50 … 104
4.0083.00.11 … 106
4.0083.00.12 … 106
4.0083.00.13 … 106
4.0083.00.14 … 106
4.0083.00.15 … 106
4.0083.00.16 … 106
4.0083.00.17 … 106
4.0083.00.19 … 106
4.0083.00.20 … 106
4.0083.00.35 … 106
4.0083.00.39 … 106
4.0083.00.50 … 106
4.0084.00.00 … 106
4.0084.55.55 … 107
4.0085.01.00 … 153
4.0086.00.11 … 126
4.0086.00.12 … 126
4.0086.00.13 … 126
4.0086.00.14 … 126
4.0086.00.15 … 126
4.0086.00.16 … 126
4.0086.00.17 … 126
4.0086.00.19 … 126
4.0086.00.20 … 126
4.0086.00.35 … 126
4.0086.00.39 … 126
4.0086.00.50 … 126
4.0086.00.51 … 126
4.0086.00.52 … 126
4.0086.00.75 … 126
4.0086.50.00 … 127
4.0087.00.01 … 100
4.0087.00.02 … 100
4.0087.00.03 … 100
4.0087.00.04 … 100
4.0087.00.05 … 100
4.0087.00.06 … 100
4.0087.00.07 … 100
4.0087.00.20 … 100
4.0087.00.35 … 100
4.0088.00.01 … 102
4.0088.00.02 … 102
4.0088.00.03 … 102
4.0088.00.04 … 102
4.0088.00.05 … 102
4.0088.00.06 … 102
4.0088.00.07 … 102
4.0088.00.20 … 102
4.0088.00.35 … 102
4.0089.00.00 … 100
4.0091.10.11 … 176
4.0091.10.12 … 176
4.0091.10.13 … 176
4.0091.10.14 … 176
4.0091.10.15 … 176
4.0091.10.16 … 176
4.0091.10.17 … 176
4.0091.10.19 … 176
4.0091.10.20 … 176
4.0091.10.35 … 176
4.0091.10.51 … 176

4.0091.20.11 … 176
4.0091.20.12 … 176
4.0091.20.13 … 176
4.0091.20.14 … 176
4.0091.20.15 … 176
4.0091.20.16 … 176
4.0091.20.17 … 176
4.0091.20.19 … 176
4.0091.20.20 … 176
4.0091.20.35 … 176
4.0091.20.51 … 176
4.0091.40.11 … 176
4.0091.40.12 … 176
4.0091.40.13 … 176
4.0091.40.14 … 176
4.0091.40.15 … 176
4.0091.40.16 … 176
4.0091.40.17 … 176
4.0091.40.19 … 176
4.0091.40.20 … 176
4.0091.40.35 … 176
4.0091.40.51 … 176
4.0093.01.00 … 177
4.0093.02.00 … 109
4.0093.02.00 … 177
4.0093.10.11 … 108
4.0093.10.12 … 108
4.0093.10.13 … 108
4.0093.10.14 … 108
4.0093.10.15 … 108
4.0093.10.16 … 108
4.0093.10.17 … 108
4.0093.10.19 … 108
4.0093.10.20 … 108
4.0093.10.35 … 108
4.0093.10.39 … 108
4.0093.20.11 … 108
4.0093.20.12 … 108
4.0093.20.13 … 108
4.0093.20.14 … 108
4.0093.20.15 … 108
4.0093.20.16 … 108
4.0093.20.17 … 108
4.0093.20.19 … 108
4.0093.20.20 … 108
4.0093.20.35 … 108
4.0093.20.39 … 108
4.0093.40.11 … 108
4.0093.40.12 … 108
4.0093.40.13 … 108
4.0093.40.14 … 108
4.0093.40.15 … 108
4.0093.40.16 … 108
4.0093.40.17 … 108
4.0093.40.19 … 108
4.0093.40.20 … 108
4.0093.40.35 … 108
4.0093.40.39 … 108
4.0094.00.00 … 108
4.0094.55.55 … 109
4.0095.00.00 … 146
4.0095.00.15 … 146
4.0095.00.16 … 146
4.0095.00.17 … 146
4.0095.00.70 … 146
4.0095.00.71 … 146
4.0097.00.00 … 146
4.0097.00.15 … 146
4.0097.00.16 … 146
4.0097.00.17 … 146
4.0097.00.70 … 146
4.0097.00.71 … 146
4.0098.00.00 … 188
4.0098.00.42 … 188
4.0098.00.70 … 188
4.0098.00.71 … 188
4.0098.00.72 … 188
4.0098.00.95 … 187
4.0098.01.00 … 188
4.0098.01.70 … 188
4.0098.01.71 … 188
4.0098.02.00 … 188
4.0098.02.35 … 188
4.0098.02.70 … 188
4.0098.02.71 … 188
4.0098.03.12 … 188
4.0098.03.35 … 188
4.0098.03.52 … 188
4.0098.03.70 … 188
4.0098.06.12 … 188
4.0098.06.35 … 188
4.0098.06.52 … 188
4.0098.06.70 … 188
4.0098.10.00 … 188
4.0098.10.42 … 188
4.0098.10.70 … 188
4.0098.10.71 … 188
4.0098.10.72 … 188
4.0098.10.95 … 187
4.0098.11.00 … 188
4.0098.11.70 … 188
4.0098.11.71 … 188
4.0098.12.00 … 188
4.0098.12.35 … 188
4.0098.12.70 … 188
4.0098.12.71 … 188
4.0098.13.12 … 188
4.0098.13.35 … 188
4.0098.13.52 … 188
4.0098.13.70 … 188
4.0098.16.12 … 188
4.0098.16.35 … 188
4.0098.16.52 … 188
4.0098.16.70 … 188
4.0098.20.00 … 188
4.0098.20.42 … 188
4.0098.20.70 … 188
4.0098.20.71 … 188
4.0098.20.72 … 188
4.0098.21.00 … 188
4.0098.21.70 … 188
4.0098.21.71 … 188
4.0098.22.00 … 188
4.0098.22.35 … 188
4.0098.22.70 … 188
4.0098.22.71 … 188
4.0098.23.12 … 188
4.0098.23.35 … 188
4.0098.23.52 … 188
4.0098.23.70 … 188
4.0098.26.12 … 188
4.0098.26.35 … 188
4.0098.26.52 … 188
4.0098.26.70 … 188
4.0098.40.00 … 188
4.0098.40.42 … 188
4.0098.40.70 … 188
4.0098.40.71 … 188
4.0098.40.72 … 188
4.0098.41.00 … 188
4.0098.41.70 … 188
4.0098.41.71 … 188
4.0098.42.00 … 188
4.0098.42.35 … 188
4.0098.42.70 … 188
4.0098.42.71 … 188
4.0098.43.12 … 188
4.0098.43.35 … 188
4.0098.43.52 … 188
4.0098.43.70 … 188
4.0098.46.12 … 188
4.0098.46.35 … 188
4.0098.46.52 … 188
4.0098.46.70 … 188
4.0100.00.11 … 46
4.0100.00.12 … 46
4.0100.00.13 … 46
4.0100.00.41 … 46
4.0100.00.42 … 46
4.0100.00.43 … 46
4.0100.30.11 … 46
4.0100.30.12 … 46
4.0100.30.13 … 46
4.0100.30.41 … 46
4.0100.30.42 … 46
4.0100.30.43 … 46
4.0100.30.80 … 46
4.0102.00.25 … 250
4.0102.01.00 … 32
4.0102.02.00 … 32
4.0102.02.40 … 32
4.0102.03.00 … 32
4.0102.20.11 … 32
4.0102.20.12 … 32
4.0102.20.13 … 32
4.0102.20.41 … 32
4.0102.20.42 … 32
4.0102.20.43 … 32
4.0102.20.80 … 32
4.0102.40.11 … 32
4.0102.40.12 … 32
4.0102.40.13 … 32
4.0102.40.25 … 250
4.0102.40.41 … 32
4.0102.40.42 … 32
4.0102.40.43 … 32
4.0102.40.80 … 32
4.0102.55.55 … 250
4.0171.00.25 … 250
4.0171.01.00 … 98
4.0171.02.00 … 98
4.0171.03.00 … 98
4.0171.20.01 … 98
4.0171.20.02 … 98
4.0171.20.03 … 98
4.0171.20.06 … 98
4.0171.20.09 … 98
4.0171.20.11 … 98
4.0171.20.12 … 98
4.0171.20.13 … 98
4.0171.20.16 … 98
4.0171.20.19 … 98
4.0171.20.20 … 98
4.0171.20.21 … 98
4.0171.20.22 … 98
4.0171.20.23 … 98
4.0171.20.31 … 98
4.0171.20.32 … 98
4.0171.20.33 … 98
4.0171.20.35 … 98
4.0171.20.43 … 98
4.0171.20.50 … 98
4.0171.20.80 … 98
4.0171.55.55 … 250
4.0192.18.01 … 134
4.0192.18.02 … 134
4.0192.18.03 … 134
4.0192.18.09 … 134
4.0192.18.10 … 134
4.0192.18.15 … 134
4.0192.18.39 … 134
4.0192.18.61 … 134
4.0192.18.62 … 134
4.0192.18.63 … 134
4.0192.90.01 … 134
4.0192.90.02 … 134
4.0192.90.03 … 134
4.0192.90.09 … 134
4.0192.90.10 … 134
4.0192.90.15 … 134
4.0192.90.39 … 134
4.0192.90.61 … 134
4.0192.90.62 … 134
4.0192.90.63 … 134
4.0195.18.01 … 138
4.0195.18.02 … 138
4.0195.18.03 … 138
4.0195.18.10 … 138
4.0195.18.20 … 138
4.0195.18.21 … 138
4.0195.18.22 … 138
4.0195.18.23 … 138
4.0195.18.35 … 138
4.0195.18.36 … 138
4.0195.18.37 … 138
4.0195.18.38 … 138
4.0195.90.01 … 138
4.0195.90.02 … 138
4.0195.90.03 … 138
4.0195.90.10 … 138
4.0195.90.20 … 138
4.0195.90.21 … 138
4.0195.90.22 … 138
4.0195.90.23 … 138
4.0195.90.35 … 138
4.0195.90.36 … 138
4.0195.90.37 … 138
4.0195.90.38 … 138
4.0197.10.01 … 180
4.0197.10.02 … 180
4.0197.10.03 … 180
4.0197.10.09 … 180
4.0197.10.61 … 180
4.0197.10.62 … 180
4.0197.10.63 … 180
4.0197.10.95 … 179
4.0197.20.01 … 180
4.0197.20.02 … 180
4.0197.20.03 … 180
4.0197.20.09 … 180
4.0197.20.61 … 180
4.0197.20.62 … 180
4.0197.20.63 … 180
4.0197.40.01 … 180
4.0197.40.02 … 180
4.0197.40.03 … 180
4.0197.40.09 … 180
4.0197.40.61 … 180
4.0197.40.62 … 180
4.0197.40.63 … 180
4.0198.10.01 … 184
4.0198.10.02 … 184
4.0198.10.03 … 184
4.0198.10.09 … 184
4.0198.10.95 … 183
4.0198.12.20 … 184
4.0198.12.35 … 184
4.0198.13.20 … 184
4.0198.13.35 … 184
4.0198.16.20 … 184
4.0198.16.35 … 184
4.0198.17.20 … 184
4.0198.17.35 … 184
4.0198.20.01 … 184
4.0198.20.02 … 184
4.0198.20.03 … 184
4.0198.20.09 … 184
4.0198.22.20 … 184
4.0198.22.35 … 184
4.0198.23.20 … 184
4.0198.23.35 … 184
4.0198.26.20 … 184
4.0198.26.35 … 184
4.0198.27.20 … 184
4.0198.27.35 … 184
4.0198.40.01 … 184
4.0198.40.02 … 184
4.0198.40.03 … 184
4.0198.40.09 … 184
4.0198.42.20 … 184
4.0198.42.35 … 184
4.0198.43.20 … 184
4.0198.43.35 … 184
4.0198.46.20 … 184
4.0198.46.35 … 184
4.0198.47.20 … 184
4.0198.47.35 … 184
4.0199.00.11 … 52
4.0199.00.12 … 52
4.0199.00.13 … 52
4.0199.00.15 … 52
4.0199.00.16 … 52
4.0199.00.19 … 52
4.0199.00.25 … 250
4.0199.00.41 … 52
4.0199.00.42 … 52
4.0199.00.43 … 52
4.0199.00.44 … 52
4.0199.01.00 … 28
4.0199.01.00 … 52
4.0199.01.41 … 52
4.0199.01.42 … 52
4.0199.01.43 … 52
4.0199.01.44 … 52
4.0199.02.00 … 28
4.0199.02.00 … 52
4.0199.03.00 … 28
4.0199.03.00 … 52
4.0199.04.00 … 28
4.0199.04.00 … 52
4.0199.55.55 … 250
4.0202.00.11 … 28
4.0202.00.12 … 28
4.0202.00.13 … 28
4.0202.00.16 … 28
4.0202.00.41 … 28
4.0202.00.42 … 28
4.0202.00.43 … 28
4.0230.01.00 … 141
4.0230.01.00 … 145
4.0230.01.00 … 187
4.0230.01.00 … 191
4.0230.41.00 … 195
4.0230.41.00 … 197
4.0231.01.00 … 187
4.0231.01.00 … 191
4.0231.02.00 … 187
4.0231.02.00 … 191
4.0240.00.11 … 130
4.0240.00.12 … 130
4.0240.00.13 … 130
4.0240.00.16 … 130
4.0240.00.41 … 130
4.0240.00.42 … 130
4.0240.00.43 … 130
4.0240.00.44 … 130
4.0240.01.00 … 130
4.0268.10.13 … 249
4.0268.10.15 … 249
4.0268.10.17 … 249
4.0271.00.01 … 70
4.0271.00.09 … 70
4.0271.00.11 … 70
4.0271.00.12 … 70
4.0271.00.13 … 70
4.0271.00.19 … 70
4.0271.00.20 … 250
4.0271.00.26 … 70
4.0271.03.10 … 70
4.0271.03.17 … 70
4.0271.03.20 … 70
4.0271.03.40 … 70
4.0271.06.10 … 70
4.0271.06.17 … 70
4.0271.06.20 … 70
4.0271.06.40 … 70
4.0271.10.10 … 70
4.0271.10.17 … 70
4.0271.10.20 … 70
4.0271.10.40 … 70

4.0273.00.01 … 72
4.0273.00.09 … 72
4.0273.00.10 … 72
4.0273.00.11 … 72
4.0273.00.12 … 72
4.0273.00.13 … 72
4.0273.00.17 … 72
4.0273.00.19 … 72
4.0273.00.20 … 72
4.0273.00.26 … 72
4.0273.00.40 … 72
4.0273.01.40 … 72
4.0274.00.00 … 70
4.0274.00.25 … 71
4.0274.00.25 … 250
4.0274.00.50 … 70
4.0274.55.25 … 71
4.0274.55.25 … 250
4.0274.55.55 … 57
4.0274.55.55 … 71
4.0274.55.55 … 250
4.0274.73.00 … 72
4.0274.75.00 … 74
4.0275.00.01 … 74
4.0275.00.09 … 74
4.0275.00.10 … 74
4.0275.00.11 … 74
4.0275.00.12 … 74
4.0275.00.13 … 74
4.0275.00.17 … 74
4.0275.00.19 … 74
4.0275.00.20 … 74
4.0275.00.26 … 74
4.0291.00.11 … 20
4.0291.00.12 … 20
4.0291.00.13 … 20
4.0291.00.16 … 20
4.0291.00.41 … 20
4.0291.00.42 … 20
4.0291.00.43 … 20
4.0291.57.11 … 66
4.0291.57.12 … 66
4.0291.57.13 … 66
4.0291.57.16 … 66
4.0291.57.41 … 66
4.0291.58.11 … 68
4.0291.58.12 … 68
4.0291.58.13 … 68
4.0291.58.16 … 68
4.0291.58.41 … 68
4.0291.73.11 … 24
4.0291.73.12 … 24
4.0291.73.13 … 24
4.0291.73.16 … 24
4.0291.73.41 … 24
4.0291.73.42 … 24
4.0291.73.43 … 24
4.0291.75.11 … 20
4.0291.75.12 … 20
4.0291.75.13 … 20
4.0291.75.16 … 20
4.0291.75.41 … 20
4.0291.75.42 … 20
4.0291.75.43 … 20
4.0291.78.11 … 24
4.0291.78.12 … 24
4.0291.78.13 … 24
4.0291.78.16 … 24
4.0291.78.41 … 24
4.0291.78.42 … 24
4.0291.78.43 … 24
4.0292.00.11 … 12
4.0292.00.12 … 12
4.0292.00.13 … 12
4.0292.00.16 … 12
4.0292.00.25 … 250
4.0292.00.41 … 12
4.0292.00.42 … 12
4.0292.00.43 … 12
4.0292.01.00 … 12
4.0292.01.73 … 16
4.0292.02.00 … 12
4.0292.02.73 … 16
4.0292.03.00 … 12
4.0292.03.73 … 16
4.0292.55.55 … 250
4.0292.73.11 … 16
4.0292.73.12 … 16
4.0292.73.13 … 16
4.0292.73.16 … 16
4.0292.73.41 … 16
4.0292.73.42 … 16
4.0292.73.43 … 16
4.0299.00.00 … 56
4.0299.00.00 … 57
4.0299.00.00 … 64
4.0299.00.00 … 65
4.0299.00.11 … 56
4.0299.00.12 … 56
4.0299.00.13 … 56
4.0299.00.16 … 56
4.0299.00.19 … 56
4.0299.00.25 … 57
4.0299.00.25 … 250
4.0299.00.41 … 56
4.0299.00.42 … 56
4.0299.00.43 … 56
4.0299.00.44 … 56
4.0299.50.00 … 56
4.0299.50.00 … 57
4.0299.50.00 … 64
4.0299.50.00 … 65
4.0299.55.25 … 57
4.0299.55.25 … 250
4.0299.73.00 … 60
4.0299.73.00 … 61
4.0299.73.11 … 60
4.0299.73.12 … 60
4.0299.73.13 … 60
4.0299.73.16 … 60
4.0299.73.19 … 60
4.0299.73.41 … 60
4.0299.73.42 … 60
4.0299.73.43 … 60
4.0299.73.44 … 60
4.0299.75.11 … 64
4.0299.75.12 … 64
4.0299.75.13 … 64
4.0299.75.16 … 64
4.0299.75.19 … 64
4.0299.75.41 … 64
4.0299.75.42 … 64
4.0299.75.43 … 64
4.0299.75.44 … 64
4.0300.00.00 … 76
4.0301.00.00 … 76
4.0302.00.00 … 142
4.0302.00.10 … 142
4.0302.00.25 … 142
4.0302.00.30 … 142
4.0302.00.35 … 142
4.0302.00.38 … 142
4.0302.00.40 … 142
4.0302.00.50 … 142
4.0302.00.70 … 142
4.0303.00.00 … 192
4.0303.00.35 … 192
4.0303.00.70 … 192
4.0303.01.00 … 192
4.0303.01.35 … 192
4.0303.01.70 … 192
4.0303.04.10 … 192
4.0303.04.75 … 192
4.0303.05.01 … 192
4.0303.05.02 … 192
4.0303.05.03 … 192
4.0303.05.09 … 192
4.0303.05.61 … 192
4.0303.05.62 … 192
4.0303.05.63 … 192
4.0304.00.95 … 191
4.0304.10.00 … 192
4.0304.10.35 … 192
4.0304.10.70 … 192
4.0304.10.95 … 191
4.0304.11.00 … 192
4.0304.11.35 … 192
4.0304.11.70 … 192
4.0304.14.10 … 192
4.0304.14.75 … 192
4.0304.15.01 … 192
4.0304.15.02 … 192
4.0304.15.03 … 192
4.0304.15.09 … 192
4.0304.15.61 … 192
4.0304.15.62 … 192
4.0304.15.63 … 192
4.0305.00.00 … 142
4.0305.00.10 … 142
4.0305.00.25 … 142
4.0305.00.30 … 142
4.0305.00.35 … 142
4.0305.00.38 … 142
4.0305.00.40 … 142
4.0305.00.50 … 142
4.0305.00.70 … 142
4.0305.50.00 … 133
4.0305.50.00 … 137
4.0305.50.00 … 141
4.0305.50.00 … 145
4.0308.20.00 … 192
4.0308.20.35 … 192
4.0308.20.70 … 192
4.0308.21.00 … 192
4.0308.21.35 … 192
4.0308.21.70 … 192
4.0308.24.10 … 192
4.0308.24.75 … 192
4.0308.25.01 … 192
4.0308.25.02 … 192
4.0308.25.03 … 192
4.0308.25.09 … 192
4.0308.25.61 … 192
4.0308.25.62 … 192
4.0308.25.63 … 192
4.0308.40.00 … 192
4.0308.40.35 … 192
4.0308.40.70 … 192
4.0308.41.00 … 192
4.0308.41.35 … 192
4.0308.41.70 … 192
4.0308.44.10 … 192
4.0308.44.75 … 192
4.0308.45.01 … 192
4.0308.45.02 … 192
4.0308.45.03 … 192
4.0308.45.09 … 192
4.0308.45.61 … 192
4.0308.45.62 … 192
4.0308.45.63 … 192
4.0311.00.00 … 76
4.0312.00.00 … 76
4.0362.00.01 … 142
4.0362.00.02 … 142
4.0362.00.03 … 142
4.0362.00.09 … 142
4.0362.00.41 … 142
4.0362.00.42 … 142
4.0362.00.43 … 142
4.0362.00.44 … 142
4.0362.00.61 … 142
4.0362.00.62 … 142
4.0362.00.63 … 142
4.0365.00.01 … 142
4.0365.00.02 … 142
4.0365.00.03 … 142
4.0365.00.09 … 142
4.0365.00.41 … 142
4.0365.00.42 … 142
4.0365.00.43 … 142
4.0365.00.44 … 142
4.0365.00.61 … 142
4.0365.00.62 … 142
4.0365.00.63 … 142
4.0690.00.00 … 249
4.1010.00.00 … 200
4.1010.10.01 … 200
4.1010.10.02 … 200
4.1010.10.03 … 200
4.1010.10.11 … 200
4.1010.10.12 … 200
4.1010.10.13 … 200
4.1025.00.00 … 200
4.1025.10.01 … 200
4.1025.10.02 … 200
4.1025.10.03 … 200
4.1025.10.11 … 200
4.1025.10.12 … 200
4.1025.10.13 … 200
4.1200.15.00 … 233
4.1200.18.00 … 233
4.1200.30.00 … 233
4.1200.36.00 … 233
4.1200.58.00 … 233
4.1205.09.00 … 233
4.1205.18.00 … 233
4.1205.24.00 … 233
4.1300.14.00 … 233
4.1300.21.00 … 233
4.1300.28.00 … 233
4.1300.35.00 … 233
4.1305.09.00 … 233
4.1305.18.00 … 233
4.1305.28.00 … 233
4.1367.00.00 … 63
4.1400.49.00 … 233
4.1400.54.00 … 233
4.1400.80.00 … 233
4.1900.00.11 … 80
4.1900.00.15 … 80
4.1900.00.30 … 80
4.1900.00.70 … 80
4.1900.01.11 … 80
4.1900.01.15 … 80
4.1900.01.30 … 80
4.1900.01.70 … 80
4.1900.02.11 … 80
4.1900.02.15 … 80
4.1900.02.30 … 80
4.1900.02.70 … 80
4.1900.03.11 … 80
4.1900.03.15 … 80
4.1900.03.30 … 80
4.1900.03.70 … 80
4.1900.04.11 … 80
4.1900.04.15 … 80
4.1900.04.30 … 80
4.1900.04.70 … 80
4.1900.50.11 … 80
4.1900.50.15 … 80
4.1900.50.30 … 80
4.1900.50.70 … 80
4.1900.60.11 … 80
4.1900.60.15 … 80
4.1900.60.30 … 80
4.1900.60.70 … 80
4.1911.00.11 … 90
4.1911.00.12 … 90
4.1911.00.13 … 90
4.1914.00.00 … 226
4.1914.01.00 … 226
4.1914.02.00 … 226
4.1914.03.00 … 226
4.1914.04.00 … 226
4.2000.00.25 … 84
4.2000.00.40 … 84
4.2000.01.25 … 84
4.2000.01.40 … 84
4.2000.02.25 … 84
4.2000.02.40 … 84
4.2000.03.25 … 84
4.2000.03.40 … 84
4.2000.04.25 … 84
4.2000.04.40 … 84
4.2000.50.25 … 84
4.2000.50.40 … 84
4.2000.60.25 … 84
4.2000.60.40 … 84
4.2001.00.00 … 149
4.2002.00.11 … 84
4.2002.00.12 … 84
4.2002.00.13 … 84
4.2002.01.11 … 84
4.2002.01.12 … 84
4.2002.01.13 … 84
4.2002.02.11 … 84
4.2002.02.12 … 84
4.2002.02.13 … 84
4.2002.03.11 … 84
4.2002.03.12 … 84
4.2002.03.13 … 84
4.2002.04.11 … 84
4.2002.04.12 … 84
4.2002.04.13 … 84
4.2002.50.11 … 84
4.2002.50.12 … 84
4.2002.50.13 … 84
4.2002.60.11 … 84
4.2002.60.12 … 84
4.2002.60.13 … 84
4.2012.00.11 … 88
4.2012.00.12 … 88
4.2012.00.13 … 88
4.2112.00.00 … 226
4.2112.01.00 … 226
4.2112.02.00 … 226
4.2112.03.00 … 226
4.2112.04.00 … 226
4.2113.00.00 … 226
4.2113.01.00 … 226
4.2113.02.00 … 226
4.2113.03.00 … 226
4.2113.04.00 … 226
4.2202.00.00 … 150
4.2202.10.00 … 150
4.2204.00.00 … 150
4.2204.10.00 … 150
4.2206.00.00 … 150
4.2500.00.00 … 224
4.2600.00.00 … 224
4.3012.00.00 … 216
4.3012.00.00 … 216
4.3012.01.00 … 216
4.3012.02.00 … 215
4.3012.03.00 … 215
4.3012.10.01 … 216
4.3012.10.02 … 216
4.3012.10.03 … 216
4.3012.10.11 … 216
4.3012.10.12 … 216
4.3012.10.13 … 216
4.3012.10.19 … 216
4.3012.10.54 … 216
4.3012.11.54 … 216
4.3012.40.01 … 216
4.3012.40.02 … 216
4.3012.40.03 … 216
4.3012.40.11 … 216
4.3012.40.12 … 216
4.3012.40.13 … 216

4.3012.40.19 … 216
4.3012.40.54 … 216
4.3012.41.54 … 216
4.3030.00.00 … 204
4.3030.00.00 … 204
4.3030.02.00 … 203
4.3030.03.00 … 203
4.3030.10.01 … 204
4.3030.10.02 … 204
4.3030.10.03 … 204
4.3030.10.07 … 204
4.3030.10.11 … 204
4.3030.10.12 … 204
4.3030.10.13 … 204
4.3030.10.19 … 204
4.3030.11.07 … 204
4.3030.40.01 … 204
4.3030.40.02 … 204
4.3030.40.03 … 204
4.3030.40.07 … 204
4.3030.40.11 … 204
4.3030.40.12 … 204
4.3030.40.13 … 204
4.3030.40.19 … 204
4.3030.41.07 … 204
4.3060.00.00 … 208
4.3060.00.00 … 208
4.3060.01.00 … 208
4.3060.02.00 … 207
4.3060.03.00 … 207
4.3060.10.01 … 208
4.3060.10.02 … 208
4.3060.10.03 … 208
4.3060.10.07 … 208
4.3060.10.11 … 208
4.3060.10.12 … 208
4.3060.10.13 … 208
4.3060.10.19 … 208
4.3060.11.07 … 208
4.3060.40.01 … 208
4.3060.40.02 … 208
4.3060.40.03 … 208
4.3060.40.07 … 208
4.3060.40.11 … 208
4.3060.40.12 … 208
4.3060.40.13 … 208
4.3060.40.19 … 208
4.3060.41.07 … 208
4.3061.01.00 … 112
4.3061.40.11 … 112
4.3061.40.12 … 112
4.3061.40.13 … 112
4.3061.40.16 … 112
4.3061.40.19 … 112
4.3090.00.00 … 212
4.3090.00.00 … 212
4.3090.01.00 … 212
4.3090.02.00 … 211
4.3090.03.00 … 211
4.3090.10.01 … 212
4.3090.10.02 … 212
4.3090.10.03 … 212
4.3090.10.11 … 212
4.3090.10.12 … 212
4.3090.10.13 … 212
4.3090.10.19 … 212
4.3090.10.39 … 212
4.3090.11.39 … 212
4.3090.40.01 … 212
4.3090.40.02 … 212
4.3090.40.03 … 212
4.3090.40.11 … 212
4.3090.40.12 … 212
4.3090.40.13 … 212
4.3090.40.19 … 212
4.3090.40.39 … 212
4.3090.41.39 … 212
4.4000.00.15 … 194
4.4000.00.71 … 194
4.4000.01.15 … 194
4.4000.01.71 … 194
4.4100.00.25 … 196
4.4100.00.26 … 196
4.4100.00.28 … 196
4.4100.00.40 … 196
4.4100.00.41 … 196
4.4100.01.25 … 196
4.4100.01.26 … 196
4.4100.01.28 … 196
4.4100.01.40 … 196
4.4100.01.41 … 196
4.4110.00.25 … 152
4.4110.00.26 … 152
4.4110.00.29 … 152
4.4110.00.30 … 152
4.4110.00.40 … 152
4.4110.00.41 … 152
4.4110.00.43 … 152
4.4110.00.44 … 152
5.0098.00.00 … 243
5.0100.00.00 … 243
5.0101.00.00 … 243
5.0103.00.00 … 243
5.0106.00.01 … 243
5.0107.00.00 … 243
5.0109.00.00 … 243
5.0310.00.01 … 243
5.0311.00.00 … 243
5.0312.00.01 … 243
5.0313.00.01 … 243
5.0314.00.01 … 243
5.0410.00.01 … 243
5.0411.00.00 … 243
5.0420.00.01 … 243
5.0421.00.00 … 243
5.0600.65.15 … 242
5.0600.65.20 … 242
5.0600.65.60 … 242
5.0620.19.52 … 240
5.0630.00.04 … 240
5.0630.01.12 … 240
5.0630.03.12 … 240
5.0630.09.52 … 240
5.0630.10.04 … 240
5.0630.10.08 … 240
5.0630.10.12 … 240
5.0635.00.01 … 237
5.0635.00.21 … 237
5.0635.00.36 … 237
5.0635.00.48 … 240
5.0635.09.16 … 239
5.0635.09.24 … 239
5.0635.09.50 … 239
5.0635.09.52 … 239
5.0635.19.52 … 239
5.0635.65.03 … 237
5.0635.65.10 … 237
5.0635.65.20 … 237
5.0670.00.06 … 240
5.0670.00.15 … 240
5.0670.00.18 … 240
5.0670.00.21 … 237
5.0670.00.30 … 237
5.0670.00.40 … 240
5.0670.01.72 … 91
5.0670.02.72 … 91
5.0670.04.72 … 91
5.0670.09.18 … 239
5.0670.09.52 … 239
5.0670.09.65 … 11
5.0670.09.65 … 15
5.0670.09.65 … 19
5.0670.09.65 … 23
5.0670.09.65 … 67
5.0670.09.65 … 69
5.0670.11.24 … 240
5.0670.19.24 … 240
5.0670.19.52 … 239
5.0670.65.10 … 237
5.0670.65.20 … 237
5.0690.03.30 … 237
5.0690.09.01 … 245
5.0690.09.02 … 245
5.0690.09.15 … 246
5.0690.09.55 … 244
5.0690.09.80 … 97
5.0690.09.80 … 123
5.0691.09.01 … 76
5.0691.09.02 … 76
5.1010.65.20 … 201
5.1010.65.60 … 201
50.4.00012.746 97
50.4.00109.138 51
50.4.00109.138 55
50.4.00109.138 59
50.4.00109.138 63
6.0150.01.84 … 231
6.0150.02.84 … 231
6.0154.01.84 … 230
6.0158.01.84 … 231
6.0158.02.84 … 231
6.0159.01.84 … 230
6.0164.01.84 … 231
6.1500.01.84 … 231
6.1500.02.84 … 231
6.1505.01.86 … 232
6.1505.02.86 … 232
6.1510.01.86 … 232
6.1515.01.86 … 232
6.1516.01.84 … 230
6.1600.01.84 … 231
6.1600.02.84 … 231
7.0009.00.00 … 251
7.0014.00.00 … 251
7.0015.00.00 … 251
7.0016.00.00 … 251
7.0217.00.00 … 251
7.0218.00.00 … 251
7.0311.20.20 … 76
7.0311.21.19 … 76
7.0417.00.00 … 251
7.2217.00.00 … 251
7.2325.00.00 … 251
82.3.00146.009 247
87.3.00002.011 247
87.4.00004.000 247
87.4.00011.000 247
87.4.00011.213 247
9.0011.00.70 … 119
9.0014.02.00 … 229
9.0014.18.00 … 229
9.0050.00.20 … 41
9.0050.00.70 … 41
9.0050.10.70 … 41
9.0050.20.00 … 41
9.0050.21.10 … 41
9.0050.21.20 … 41
9.0052.00.20 … 35
9.0052.00.30 … 35
9.0052.00.50 … 35
9.0052.00.50 … 41
9.0068.00.00 … 247
9.0072.00.20 … 123
9.0072.00.70 … 123
9.0072.20.00 … 123
9.0072.21.00 … 123
9.0072.22.00 … 123
9.0100.00.20 … 45
9.0100.00.70 … 45
9.0100.10.70 … 45
9.0100.20.00 … 45
9.0100.21.10 … 45
9.0100.21.20 … 45
9.0102.00.20 … 31
9.0102.00.50 … 31
9.0102.00.50 … 45
9.0192.00.70 … 133
9.0192.00.70 … 137
9.0199.20.00 … 51
9.0199.20.00 … 250
9.0202.00.20 … 27
9.0217.00.00 … 251
9.0218.00.00 … 251
9.0274.00.10 … 19
9.0274.73.10 … 23
9.0291.20.00 … 250
9.0291.40.00 … 250
9.0299.00.10 … 55
9.0299.00.10 … 63
9.0299.20.00 … 55
9.0299.20.00 … 250
9.0299.20.73 … 59
9.0299.40.00 … 55
9.0299.40.00 … 250
9.0299.40.73 … 59
9.0299.73.10 … 59
9.0417.00.00 … 251
9.0630.65.12 … 11
9.0630.65.12 … 15
9.0630.65.12 … 19
9.0630.65.12 … 23
9.0630.65.12 … 67
9.0630.65.12 … 69
9.1010.00.01 … 199
9.1010.00.30 … 199
9.1010.00.40 … 199
9.1010.01.01 … 199
9.1010.01.30 … 199
9.1920.00.00 … 79
9.1921.00.00 … 79
9.2000.00.00 … 83
9.2020.00.00 … 83
9.2021.00.00 … 83
9.2217.00.00 … 251
9.6150.02.05 … 247
9.6150.02.10 … 199
9.6150.02.10 … 247
9.6150.02.15 … 247
9.6150.02.25 … 19
9.6150.02.25 … 23
9.6150.02.25 … 247
9.6150.02.40 … 19
9.6150.02.40 … 23
9.6150.02.40 … 247
9.6150.02.60 … 247
9.6150.03.15 … 247
9.6150.04.10 … 247
9.6150.04.41 … 19
9.6150.04.41 … 23
9.6150.04.41 … 247
9.6150.06.05 … 247
9.6150.06.10 … 247
9.6150.08.05 … 247
9.6150.10.05 … 247
9.6150.23.25 … 247
9.6150.25.10 … 247
9.6150.25.40 … 247
9.6250.02.05 … 247
9.6250.02.15 … 247
9.6250.02.25 … 247
9.6250.02.40 … 247
9.6250.02.60 … 247
9.6250.03.15 … 247
9.6250.03.25 … 247
9.6250.05.15 … 247
9.6250.06.05 … 247
9.6250.08.05 … 247
9.6250.16.05 … 247
9.6300.00.00 … 247
9.8167.00.00 … 71
9.8167.00.00 … 250
9.8267.00.00 … 71
9.8267.00.00 … 250
9.9004.00.09 … 247
9.9004.00.11 … 247
9.9004.00.13 … 247
9.9004.00.16 … 247
9.9004.05.11 … 247
9.9004.05.13 … 247
9.9004.05.16 … 247
9.9004.40.11 … 247
9.9004.40.13 … 247
9.9004.40.16 … 247
9.9004.45.11 … 247
9.9004.45.13 … 247
9.9004.45.16 … 247
9.9006.40.00 … 247
9.9006.41.00 … 247
9.9007.00.10 … 248
9.9007.00.14 … 248
9.9007.10.10 … 248
9.9007.10.14 … 248
9.9007.50.00 … 248
9.9007.60.00 … 248
9.9007.60.10 … 248
9.9010.00.16 … 248
9.9010.68.16 … 248
9.9011.00.25 … 248
9.9011.02.02 … 248
9.9011.02.02 … 248
9.9011.02.03 … 248
9.9011.02.03 … 248
9.9011.03.03 … 248
9.9011.03.03 … 248
9.9011.03.09 … 248
9.9011.03.09 … 248
9.9011.04.03 … 248
9.9011.04.03 … 248
9.9268.50.10 … 250
9.9268.50.20 … 250
9.9268.50.30 … 250
9.9700.00.10 … 250
9.9700.00.15 … 250
9.9700.00.50 … 250

IP54 — Protected against dust, Water splashed from all directions

IP65 — Total protection against dust, Jet-proof; water jets: pressure 0.3 bar at 3 m

IP67 — Total protection against dust, Waterproof (immersible below 1 m)

IP68 — Total protection against dust, Pressure-watertight (submersible)

STAINLESS STEEL V4A 1.4571 316Ti — tainless steel, material no. 316Ti, .4571

STAINLESS STEEL V4A 1.4539 904L — tainless steel, material no. 904L, .4539

ELECTRO POLISHED — Stainless stelle e-polished

ALU — Aluminium

SOLE SALINE — Saline version

max 3m — The maximum installation depht

The spotlight indicated may only be used under water.

The spotlight indicated may be used over and under water.

The spotlight indicated may only be used over water.

5t — Drive-over for pressure loads

Wall or floor installation

Wall installation

Floor installation

Attachment cover

Flush cover

90° — Spotlight adjustable 90°

180° — Spotlight adjustable 180°

Installation housing

asymmetrical radiation of floor mounted floodlights

symmetrical radiation of floor mounted floodlights

radiation of orientation floodlights, diffus

Swivel flood reflectors of floor mounted floodlights

Swivel medium reflectors of floor mounted floodlights

Swivel spot reflectors of floor mounted floodlights

INCL — Bulb included

EXCL. — Bulb excluded

CABLE INCL. — Cable included

CABLE EXCL. — Cable excluded

DALI 1-10 V OPTIONAL DIMM — dimmable

30° — Radiation angle

adjustable

pivotable and adjustable

EU conformity declaration

Class I

Class II

Class III

Cool Contact – certificate of conformity for standardize temperature reduction on the glass surface min. <75°C

IK10 — IK10 Impact test: 20 Joule

Our range of products on offer is without engagement. Reservations are made to changes occasioned by technical development. The only valid pricelist is always the current issue.
Prices for our lights are always without bulb, if not mentioned otherwise.
All information are to be understood exclusively for deliveries and services on the basis of our General Terms and Conditions as of 01/2018. The General Terms and Conditions can be requested from WIBRE Elektrogeräte Edmund Breuninger GmbH & Co. KG, Liebigstrasse 9, D-74211 Leingarten, Tel. +49 7131 9053-0, Fax +49 7131 9053-19 or retrieved on the Internet at www.wibre.de using the link „Terms and Conditions" in the footer our web page.
With this catalogue all other documentations and lists lose the validity. (November 2018)
We decline any responsability for printing errors and other mistakes.

Photos: WIBRE
Concept, Layout, Production: WIBRE (Benjamin Pfendt)
Print: Druckerei Schweikert Druck, Obersulm
Version: W866-V19-AUF15-D1218S, November 2018

WIBRE

WIBRE Elektrogeräte
Edmund Breuninger GmbH & Co. KG
Liebigstraße 9
74211 Leingarten
Germany

Phone: +49 (0) 7131 9053-0
Fax: +49 (0) 7131 9053-19

E-Mail: info@wibre.de
Internet: www.wibre.de